SIEMENS

MAGNETOM

MR

Diagrams

System K2200

Harmony *syngo*MR
Symphony *syngo*MR
Sonata *syngo*MR
Upgrades to *syngo*MR:
from Impact/Expert
from Vision

© Siemens 1996
- For internal use only - All documents may only be used by authorized personnel for rendering services on Siemens Healthcare Products. Any document in electronic form may be printed once. Copy and distribution of electronic documents and hardcopies is prohibited. Offenders will be liable for damages. All other rights are reserved.

Print No.: M1-010.844.01.06.02
Replaces: M1-010.844.01.05.02

English
Doc. Gen. Date 06/11

Copyright

"© Siemens, 2010" refers to the copyright of a Siemens entity such as Siemens Aktiengesellschaft - Germany, Siemens Shenzhen Magnetic Resonance Ltd. - China, Siemens Shanghai Medical Equipment Ltd. - China, Siemens Medical Solutions USA Inc. - USA and/or Siemens Healthcare Diagnostics Inc. - USA.

Document Version

Siemens reserves the right to change its products and services at any time.

In addition, manuals are subject to change without notice. The hard-copy documents correspond to the version at the time of system delivery and/or printout. Versions to hardcopy documentation are not automatically distributed. Please contact your local Siemens office to order current version or refer to our website http://www.health-care.siemens.com.

Disclaimer

Siemens provides this documentation "as is" without the assumption of any liability under any theory of law.

The service of equipment described herein is to be performed by qualified personnel who are employed by Siemens or one of its affiliates or who are otherwise authorized by Siemens or one of its affiliates to provide such services.

Assemblers and other persons who are not employed by or otherwise directly affiliated with or authorized by Siemens or one of its affiliates are not entitled to use this documentation without prior written authority.

Table of Contents

The Table of Contents is found in the Bookmarks tab card which is shown/hidden with key **F5**.

Links

The Blue boxes found throughout the diagrams are hyperlinks.

Useful Acrobat Reader Shortcuts

There are a few keyboard shortcuts which will make using this PDF file much easier.

Alt + left arrow key	go back to previous page/view
Alt + “+”	zoom in
Alt + “-”	zoom out
Ctrl + 0	fit page in window (useful if you zoomed)

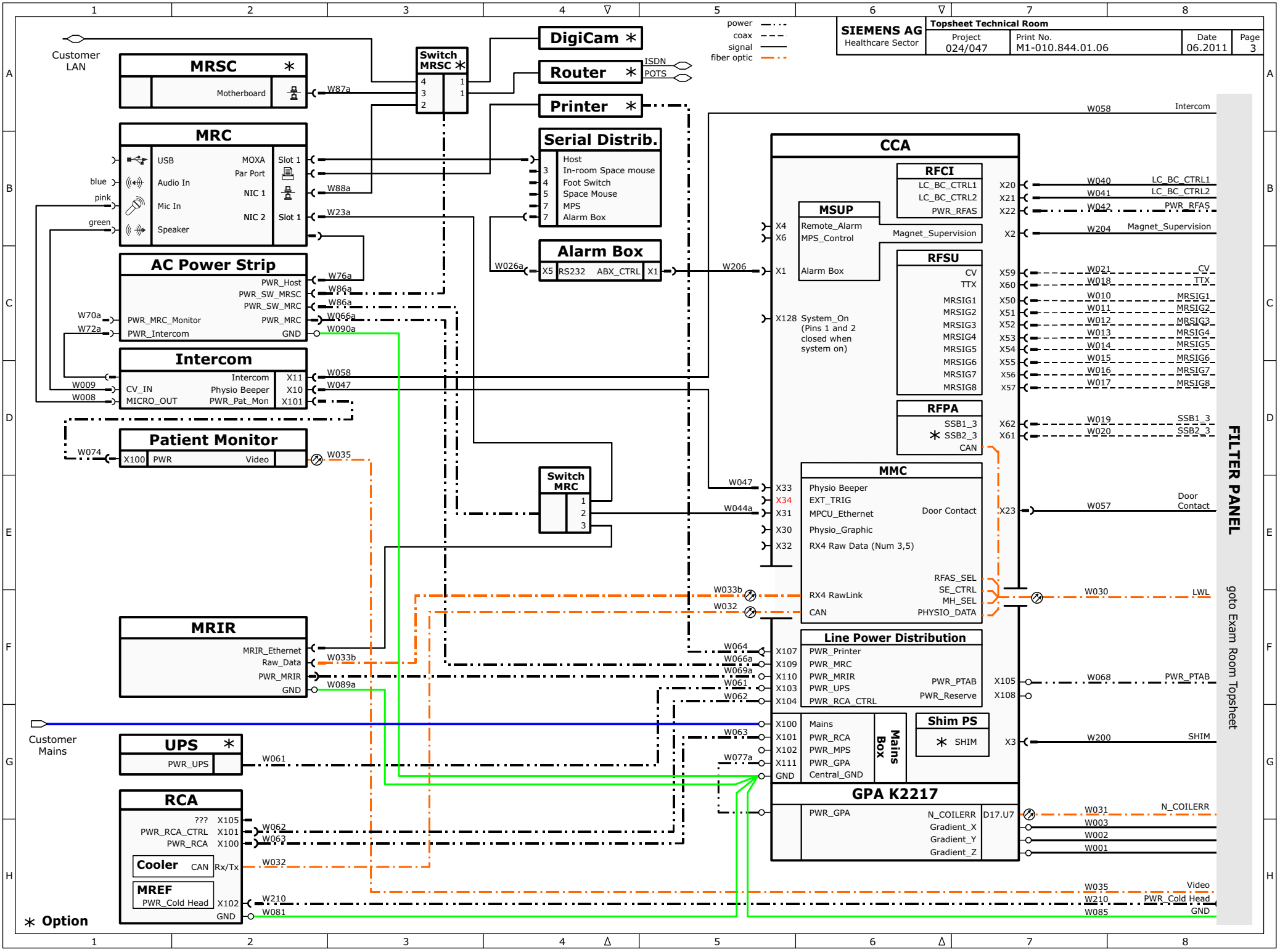

For internal use only. Copyright Siemens, 2010

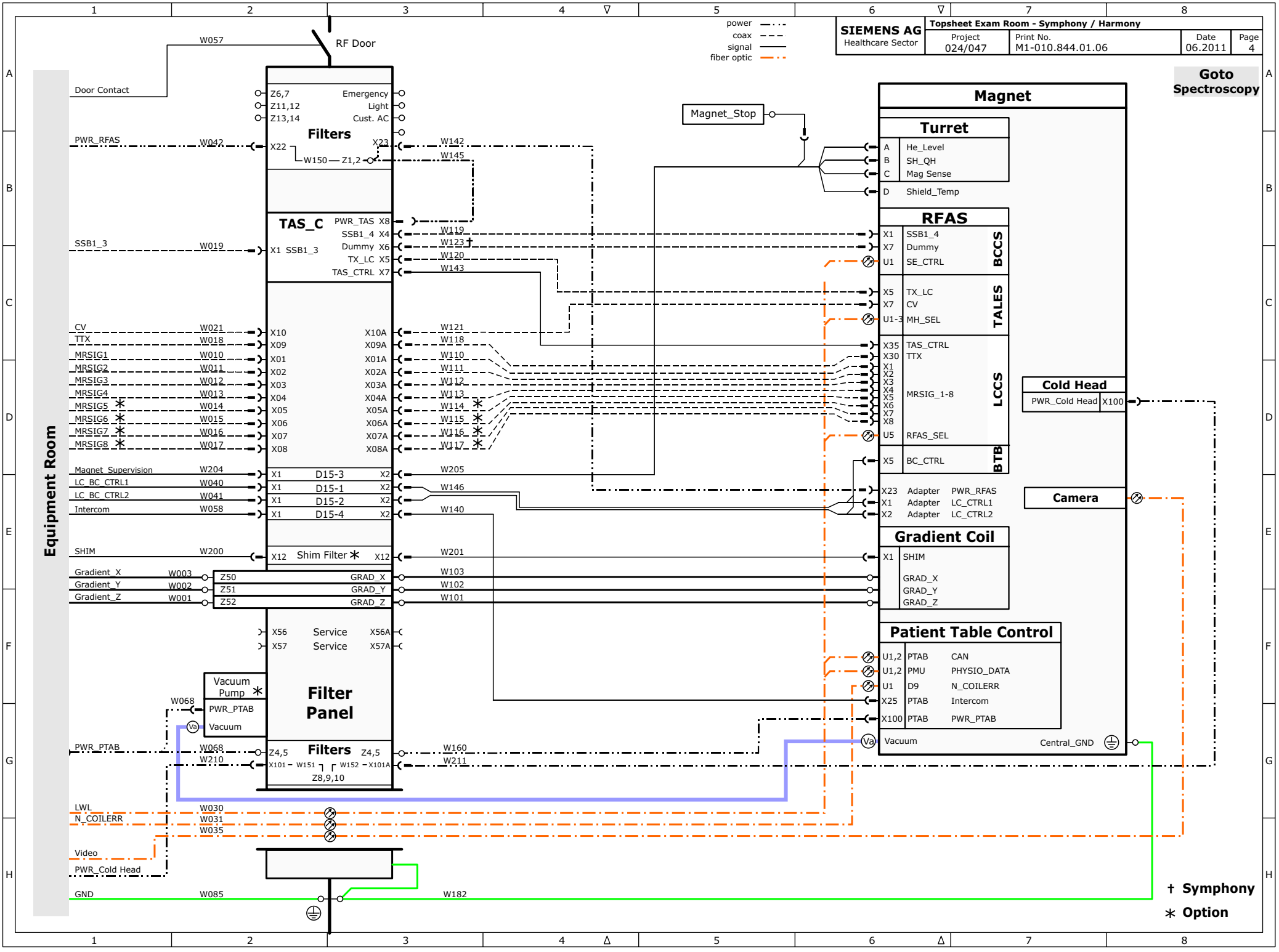

For internal use only. Copyright Siemens, 2010

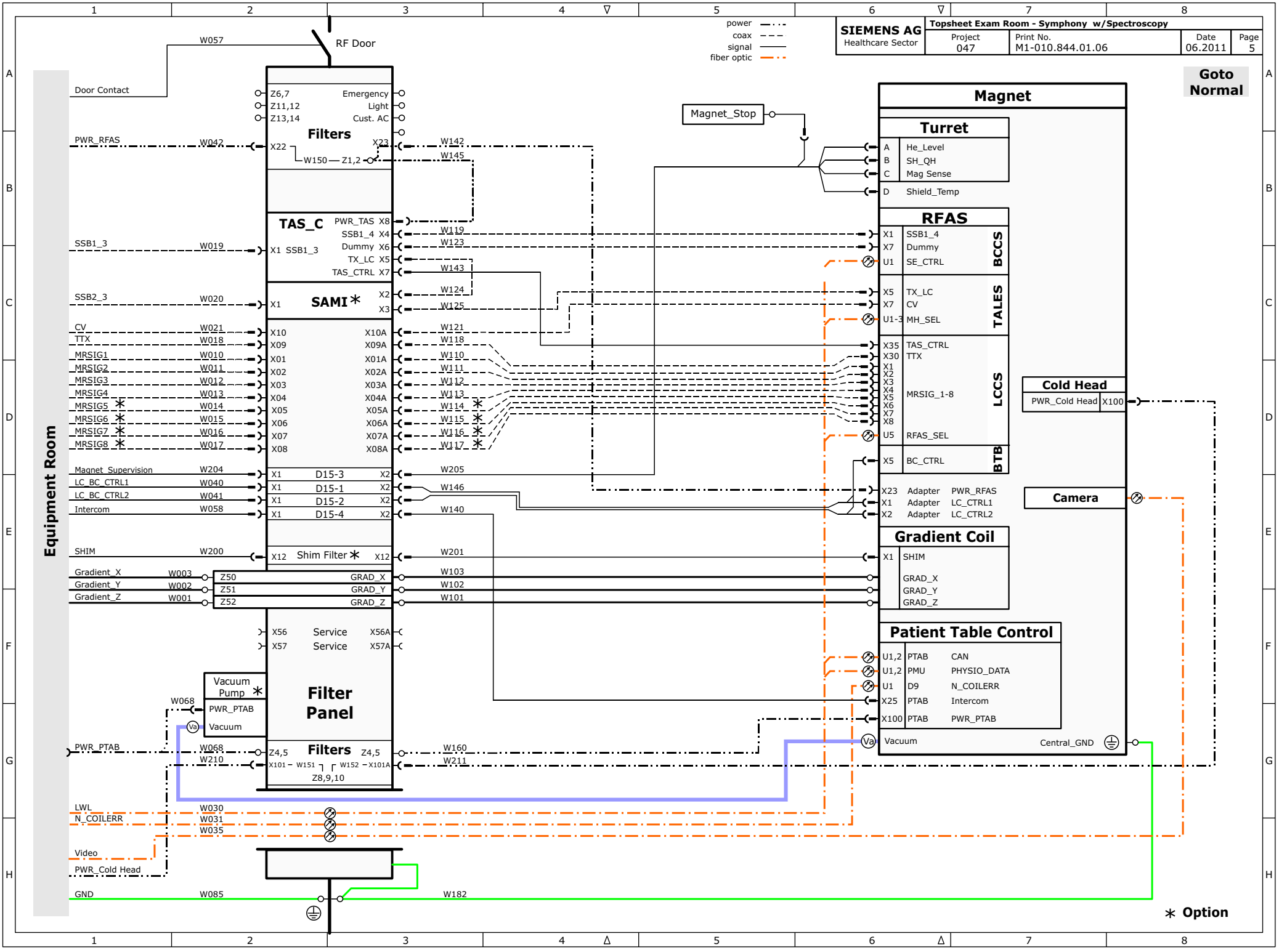

For internal use only. Copyright Siemens, 2010

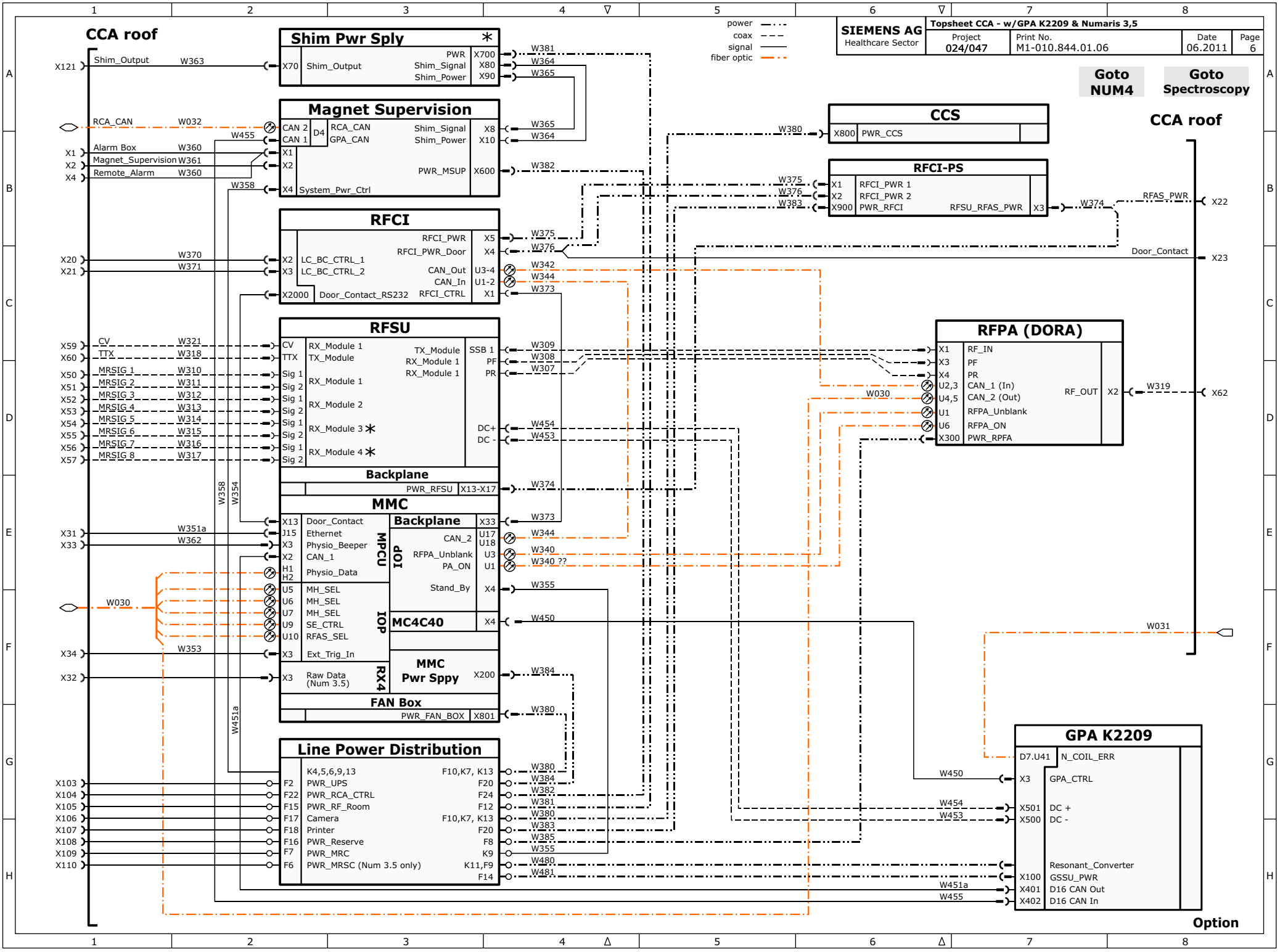
SIEMENS AG
Healthcare Sector
Topsheet CCA - w/GPA K2209 & Numaris 3,5
Project 024/047
Print No. M1-010.844.01.06
Date 06.2011
Page 6
power
coax
signal
fiber optic
Goto NUM4
Goto Spectroscopy
CCA roof
Shim Pwr Sply
Shim_Output
PWR
Shim_Signal
Shim_Power
Magnet Supervision
RCA_CAN
GPA_CAN
Alarm Box
Magnet_Supervision
Remote_Alarm
PWR_MSUP
System_Pwr_Ctrl
RFCI
RFCI_PWR
RFCI_PWR_Door
LC_BC_CTRL_1
LC_BC_CTRL_2
CAN_Out
CAN_In
RFCI_CTRL
Door_Contact_RS232
RFSU
CV
TTX
TX_Module
RX_Module 1
RX_Module 2
RX_Module 3
RX_Module 4
SSB 1
PF
PR
DC+
DC -
Backplane
PWR_RFSU
MMC
Door_Contact
Ethernet
Physio_Beeper
CAN_1
Physio_Data
MPCU
MH_SEL
SE_CTRL
RFAS_SEL
IOP
Ext_Trig_In
Raw Data (Num 3.5)
RX4
CAN_2
RFPA_Unblank
PA_ON
Stand_By
MC4C40
MMC Pwr Sppy
FAN Box
PWR_FAN_BOX
Line Power Distribution
PWR_UPS
PWR_RCA_CTRL
PWR_RF_Room
Camera
Printer
PWR_Reserve
PWR_MRC
PWR_MRSC (Num 3.5 only)
CCS
PWR_CCS
RFCI-PS
RFCI_PWR 1
RFCI_PWR 2
PWR_RFCI
RFSU_RFAS_PWR
RFPA (DORA)
RF_IN
CAN_1 (In)
CAN_2 (Out)
RFPA_Unblank
RFPA_ON
PWR_RPFA
RF_OUT
GPA K2209
N_COIL_ERR
GPA_CTRL
DC +
DC -
Resonant_Converter
GSSU_PWR
D16 CAN Out
D16 CAN In
Option
For internal use only. Copyright Siemens, 2010

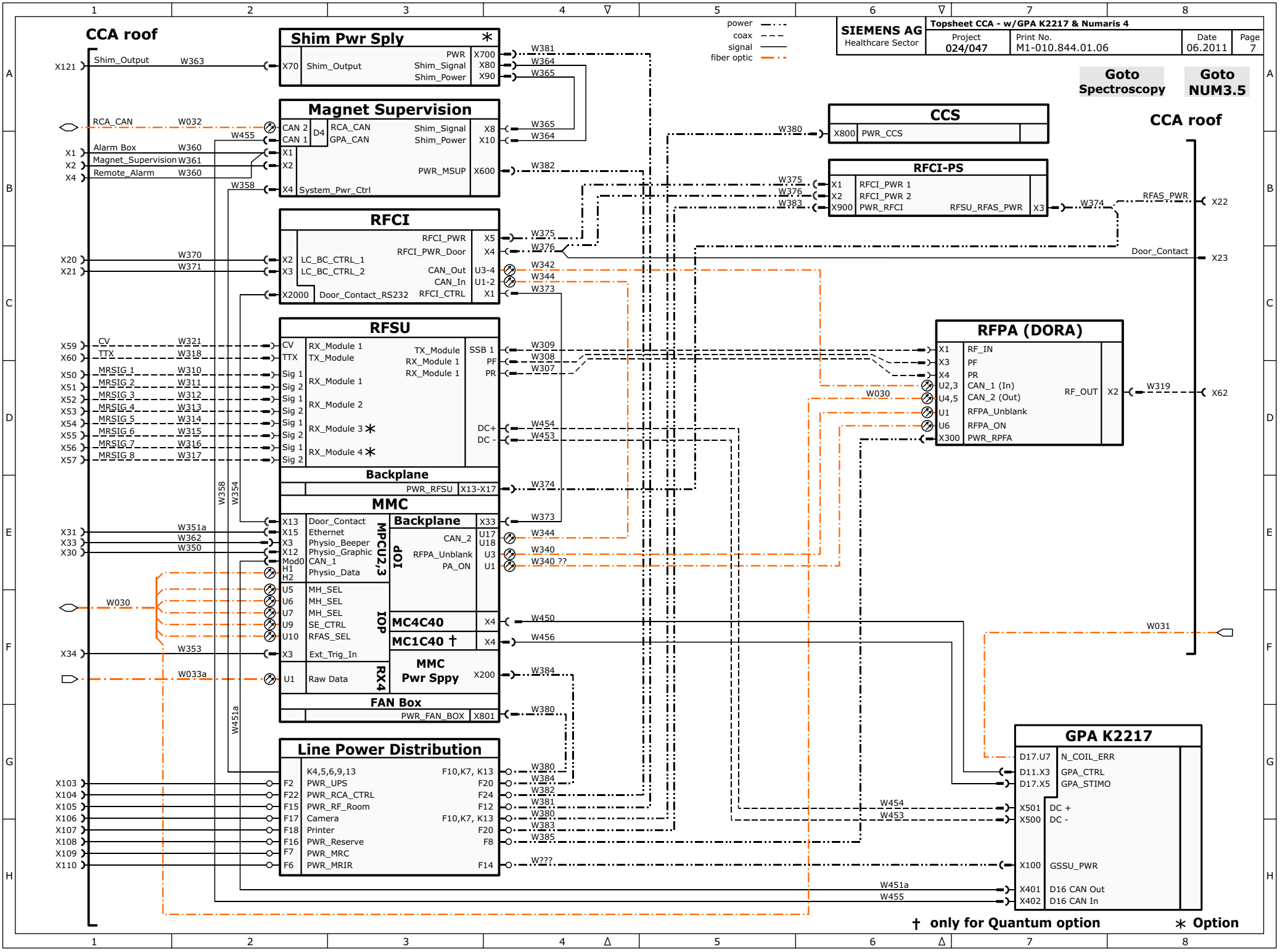
SIEMENS AG
Healthcare Sector
Topsheet CCA - w/GPA K2217 & Numaris 4
Project 024/047
Print No. M1-010.844.01.06
Date 06.2011
Page 7
power
coax
signal
fiber optic
CCA roof
Shim Pwr Sply
Magnet Supervision
RFCI
RFSU
Backplane
MMC
MPCU2,3
IOP
RX4
MC4C40
MC1C40 †
MMC Pwr Sppy
FAN Box
Line Power Distribution
CCS
RFCI-PS
RFPA (DORA)
GPA K2217
Goto Spectroscopy
Goto NUM3.5
† only for Quantum option
* Option
For internal use only. Copyright Siemens, 2010

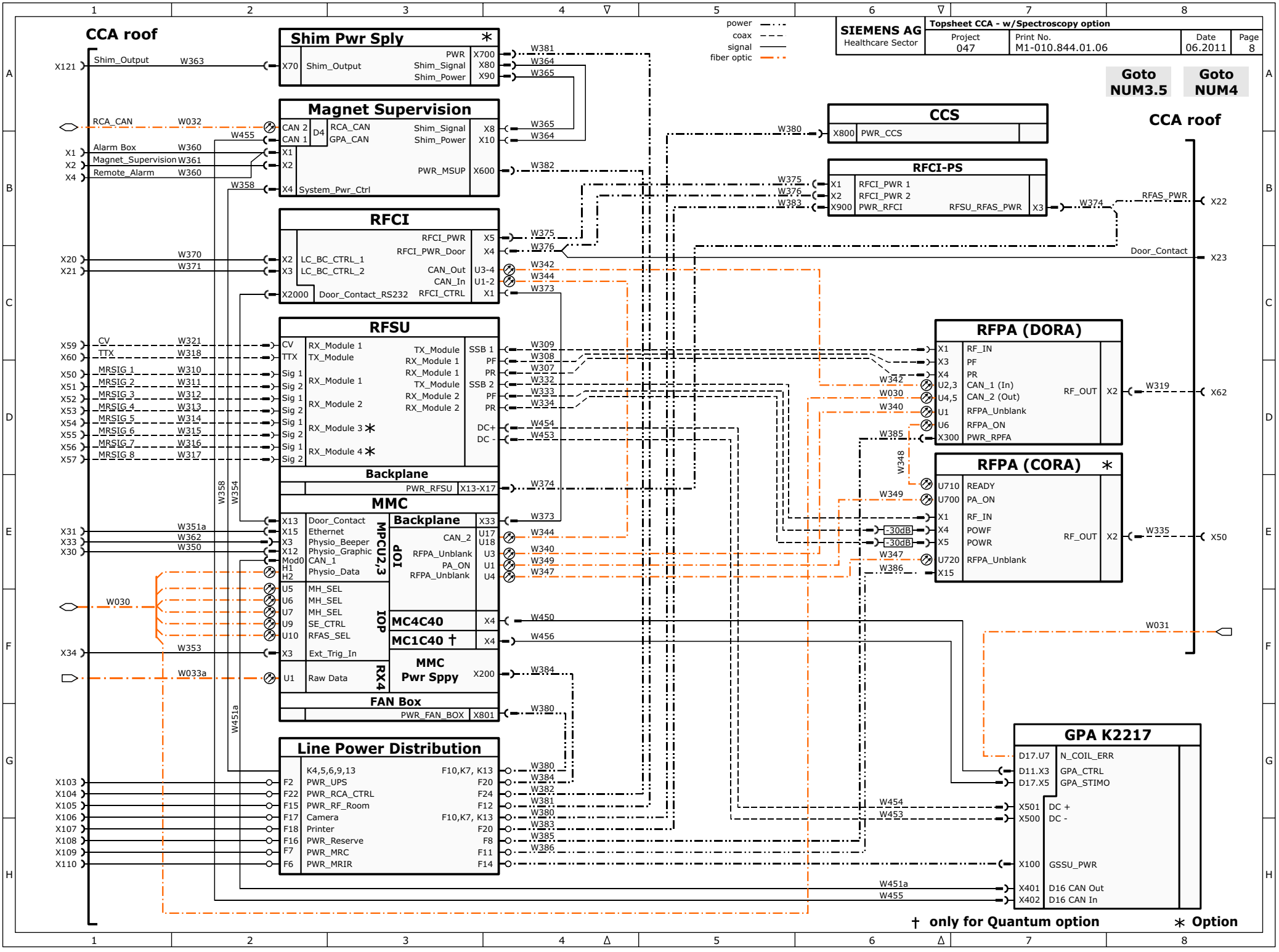
SIEMENS AG
Healthcare Sector
Topsheet CCA - w/Spectroscopy option
Project 047
Print No. M1-010.844.01.06
Date 06.2011
Page 8
power
coax
signal
fiber optic
Goto NUM3.5
Goto NUM4
CCA roof
Shim Pwr Sply
Magnet Supervision
RFCI
RFSU
Backplane
MMC
MPCU2,3
IOP
RX4
MC4C40
MC1C40 †
MMC Pwr Sppy
FAN Box
Line Power Distribution
CCS
RFCI-PS
RFPA (DORA)
RFPA (CORA)
GPA K2217
† only for Quantum option
Option
For internal use only. Copyright Siemens, 2010

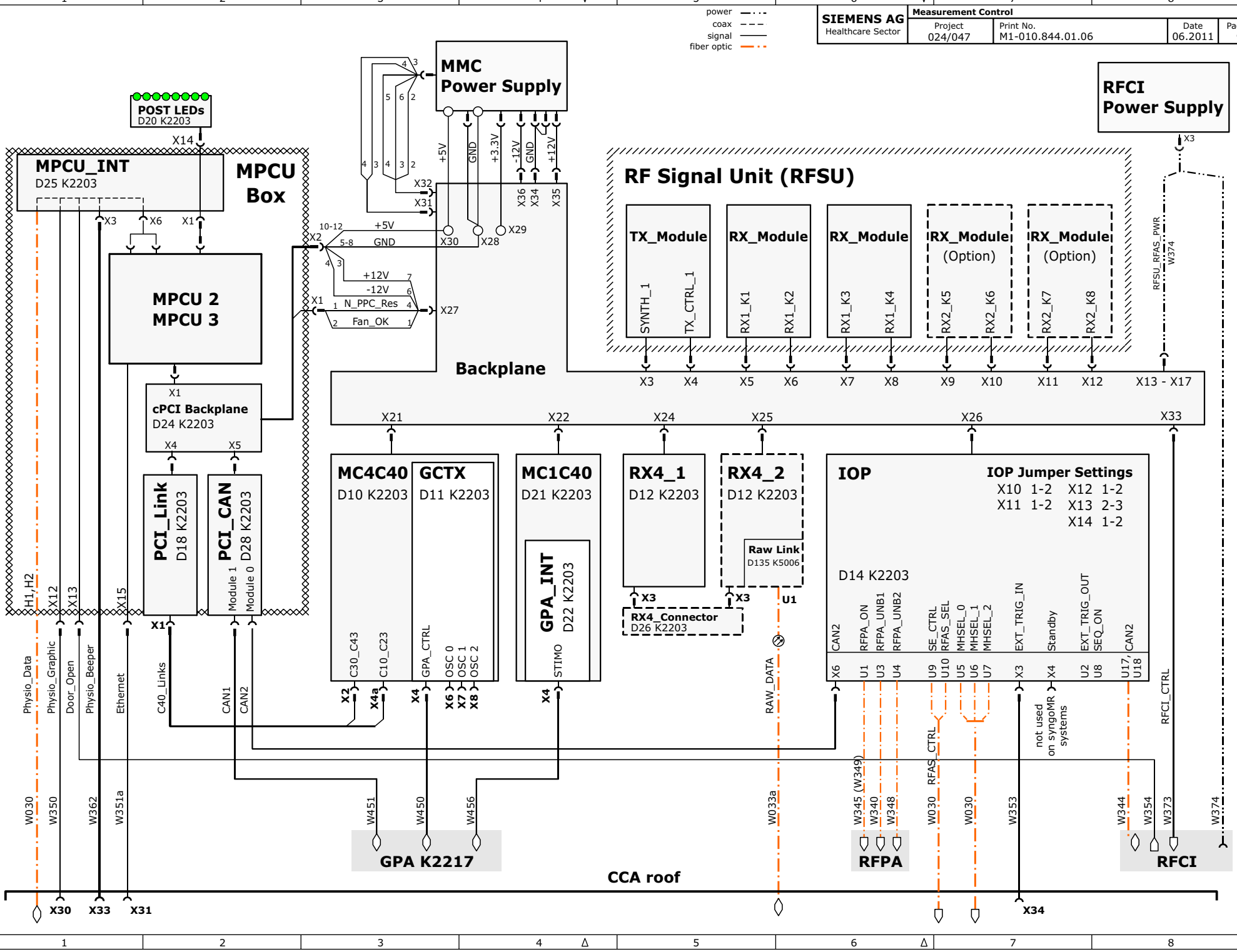

For internal use only. Copyright Siemens, 2010

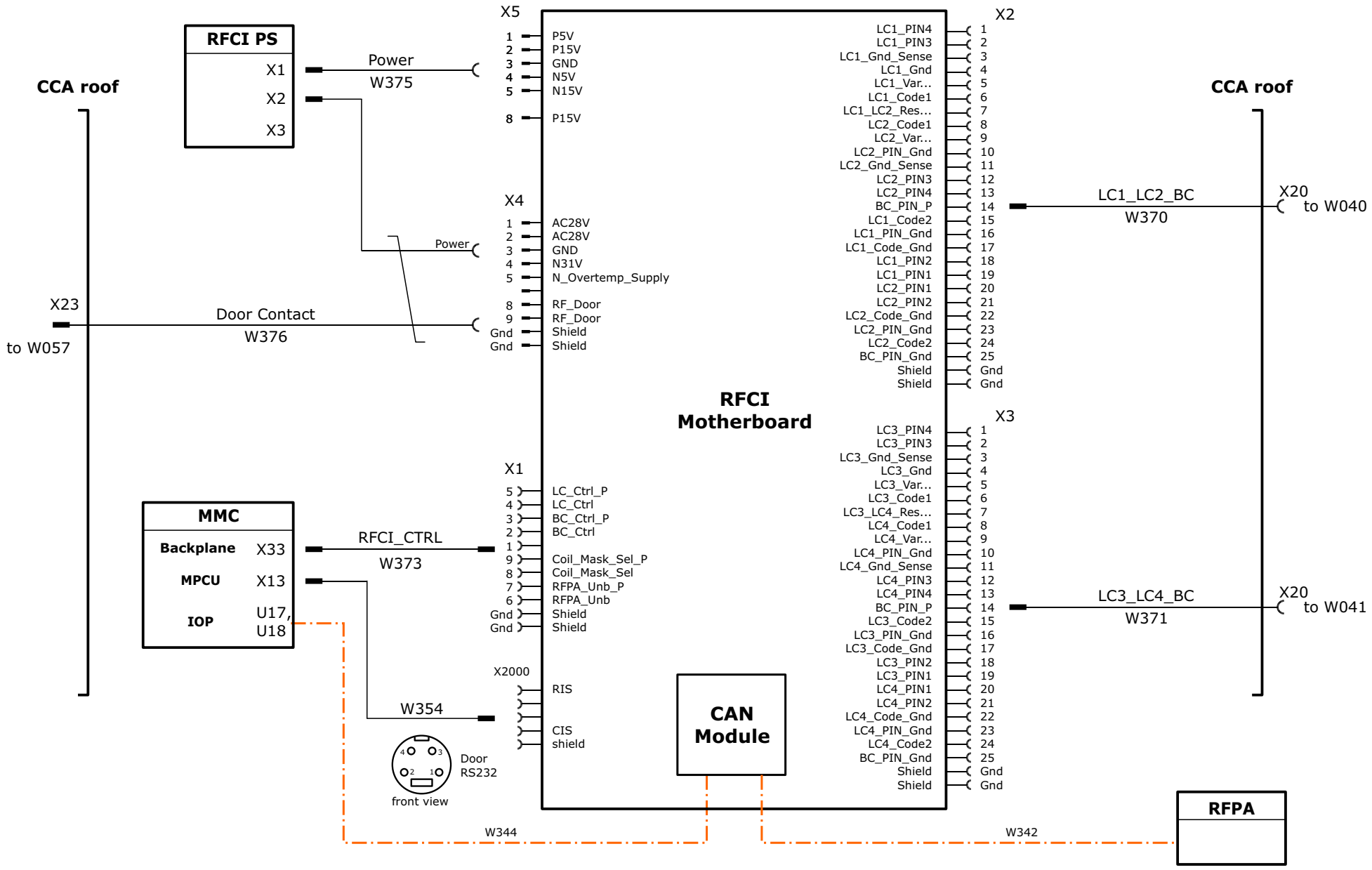

For internal use only. Copyright Siemens, 2010

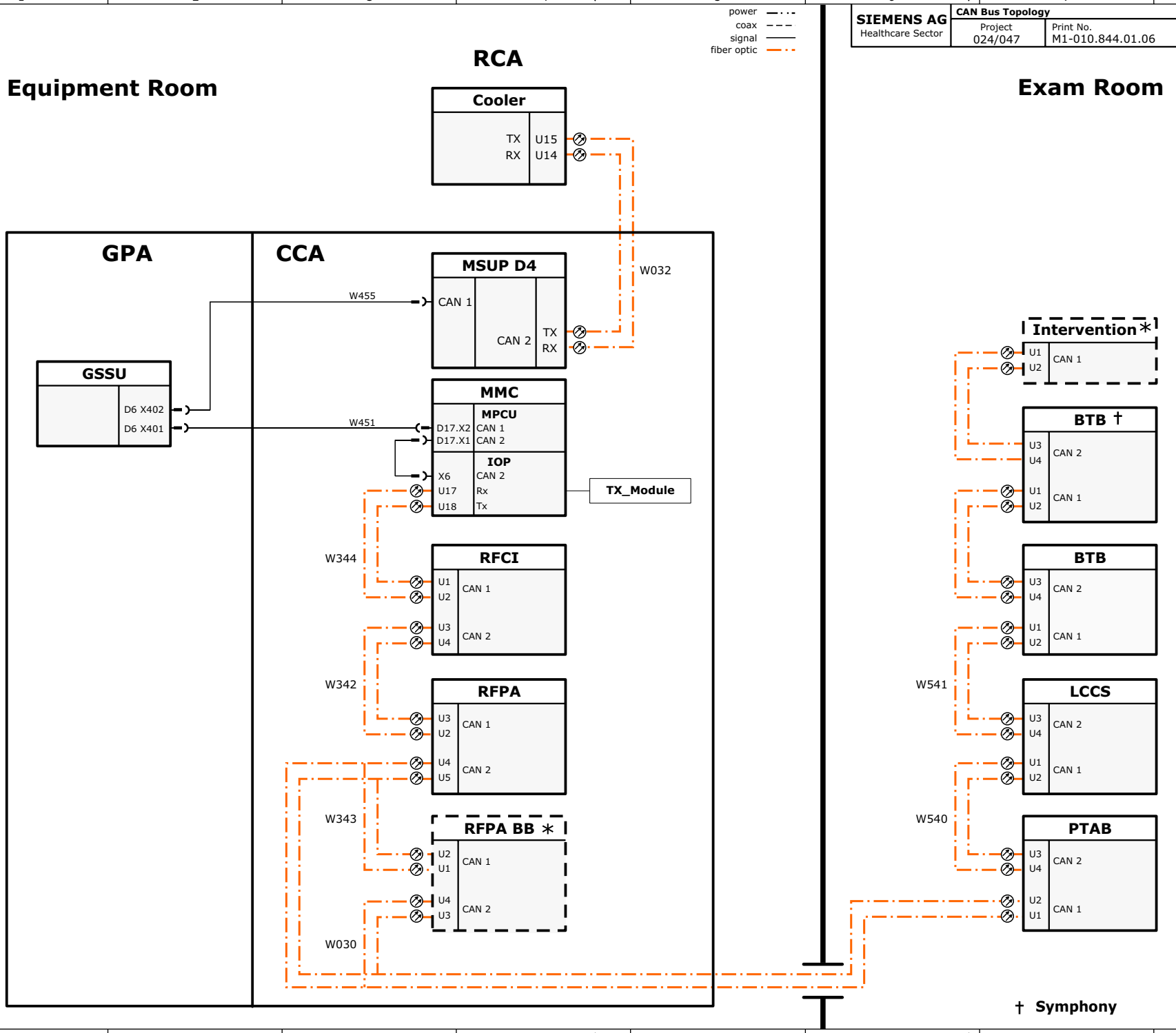

For internal use only. Copyright Siemens, 2010

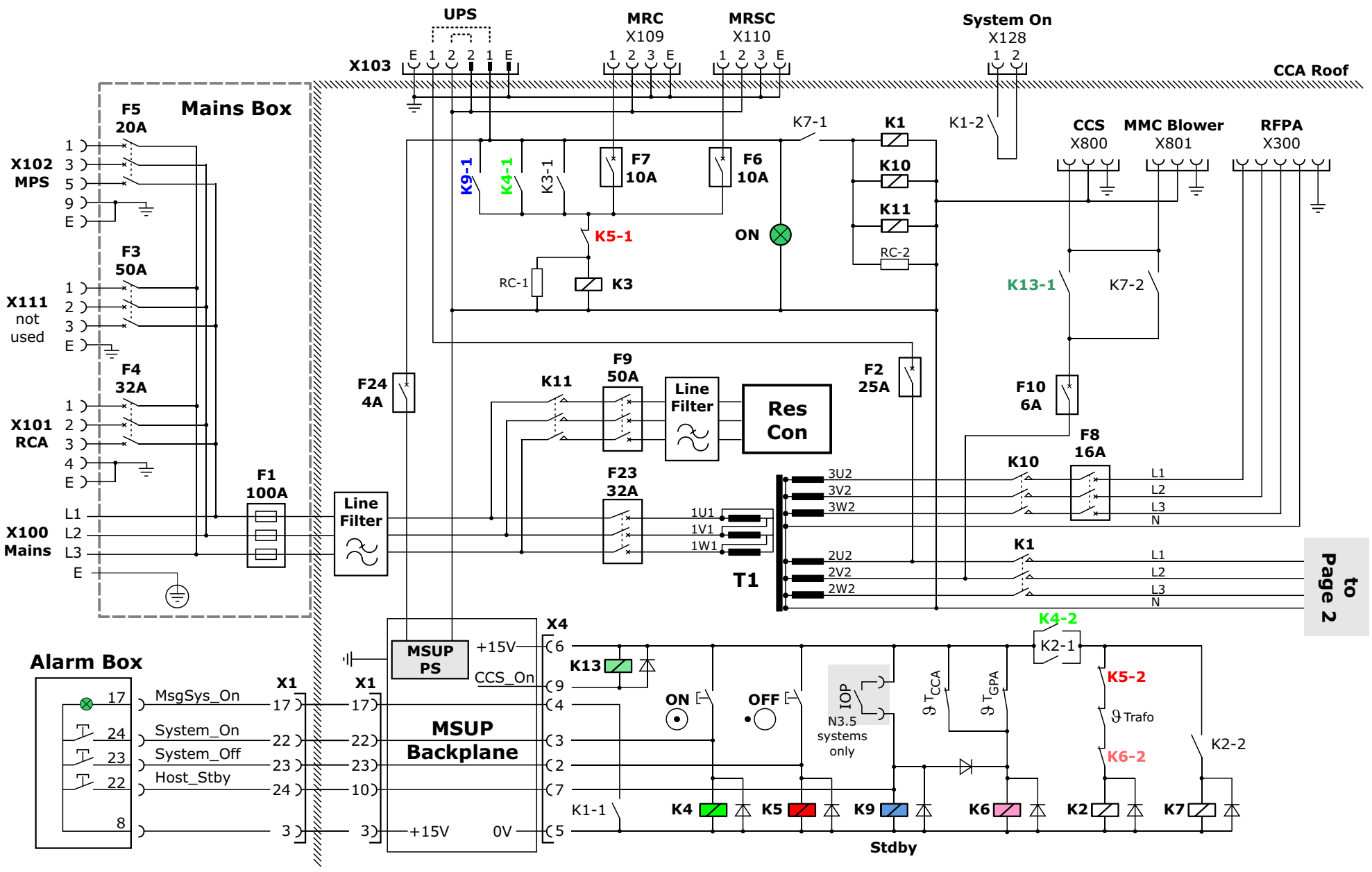

For internal use only. Copyright Siemens, 2010

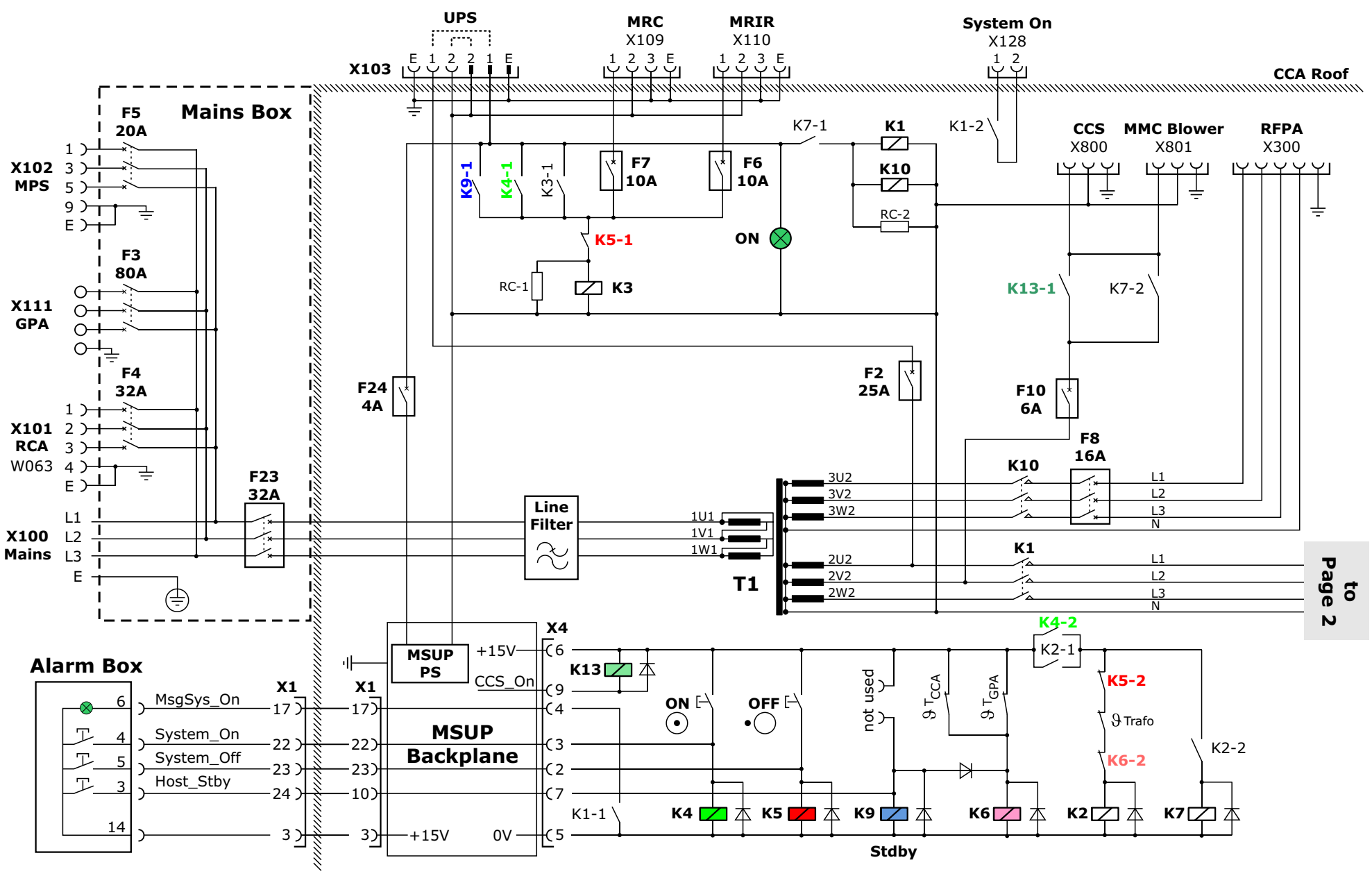

For internal use only. Copyright Siemens, 2010

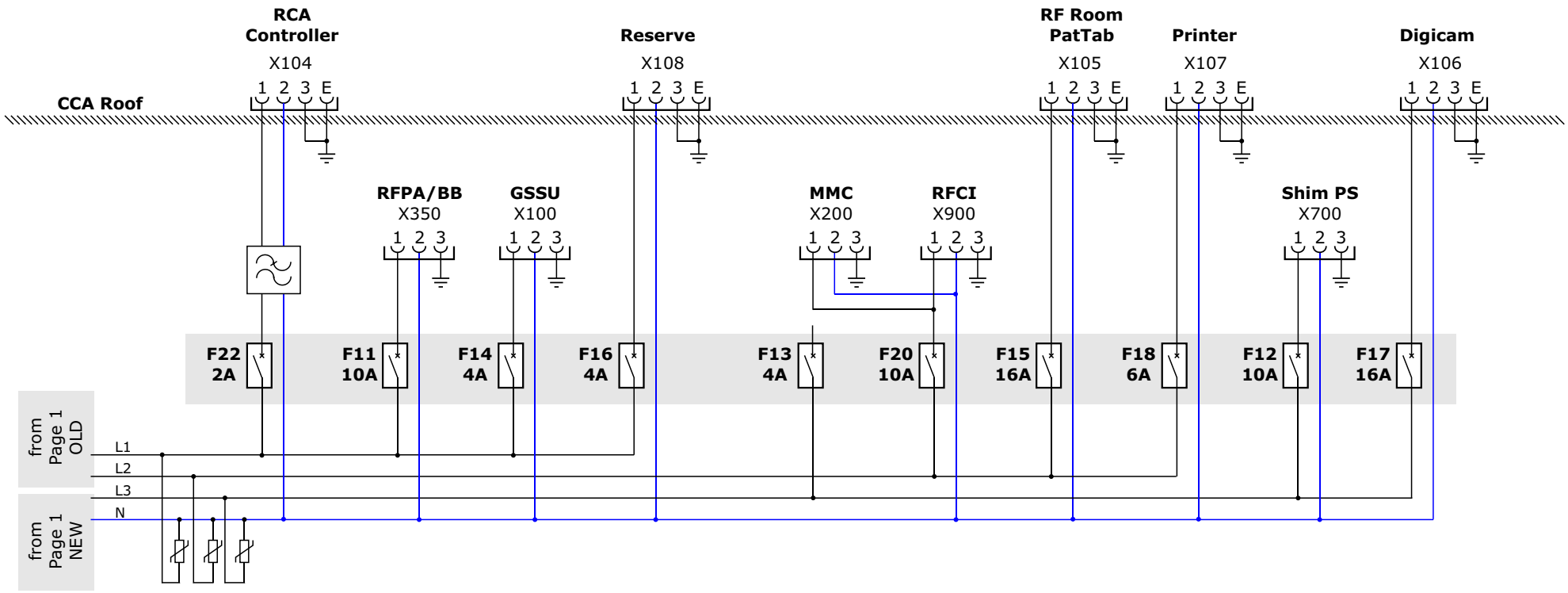

For internal use only. Copyright Siemens, 2010

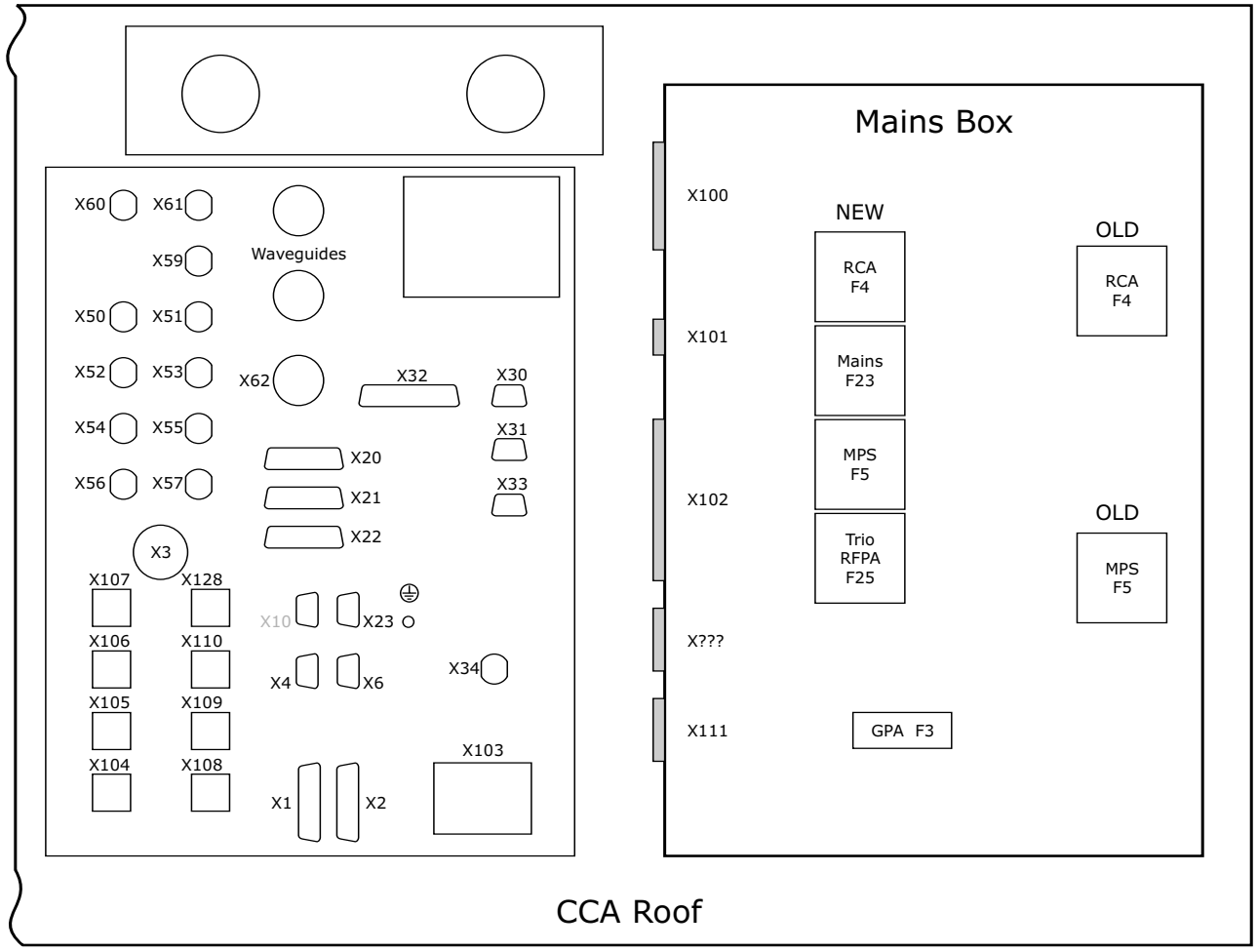

X1 Alarm Box
X2 Magnet Supervision
X3 Shim PS output
X4 Remote Alarm
X6 MPS Control
X10 nc

X20 LC_BC_Ctrl1
X21 LC_BC_Ctrl2
X22 PWR_RFAS
X23 Door Contact

X30 MPCU Com port 2
X31 MPCU Ethernet
X32 Raw Data (SMI-5)
X33 MPCU Com port 1 - Physio_Beeper
X34 Ext trigger ???

X50 - X57 Receive cables
X59 CV (from TALES)
X60 TTX (to LCCS)
X61 SSB2 (RFPA BB output)
X62 SSB1 (RFPA output)

X100 Mains input
X101 RCA power (3 phase)
X102 MPS power (3 phase)
X103 UPS connection
X104 RCA Cooler controller power (1 phase
X105 RF Room power
X106 Camera power
X107 Printer power
X108 Reserve power (1 phase)
X109 MRC power
X110 MRIR power
X111 GPA power (3 phase)

X128 System power on relay contact

For internal use only. Copyright Siemens, 2010

CCS Plumbing Diagram

to CCS Wiring Diagram

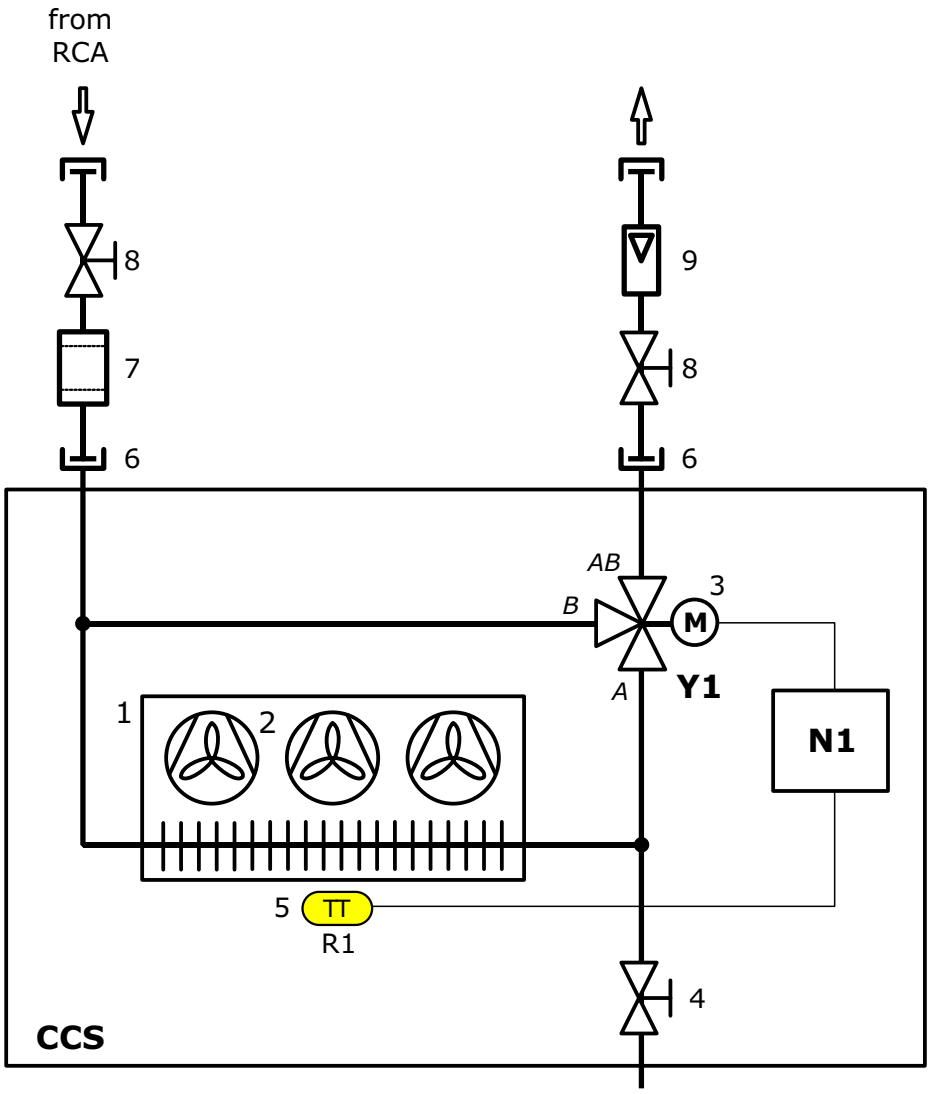

R1 Thermal sensor

Legend

1 Heat exchanger
2 blowers M1 - M3
3 3-way valve
4 Drain valve
5 Temperature sensor
6 3/4” connector
7 Strainer
8 Shut-off valve
9 Flow glass

For internal use only. Copyright Siemens, 2010

CCS Wiring Diagram

to CCS Plumbing Diagram

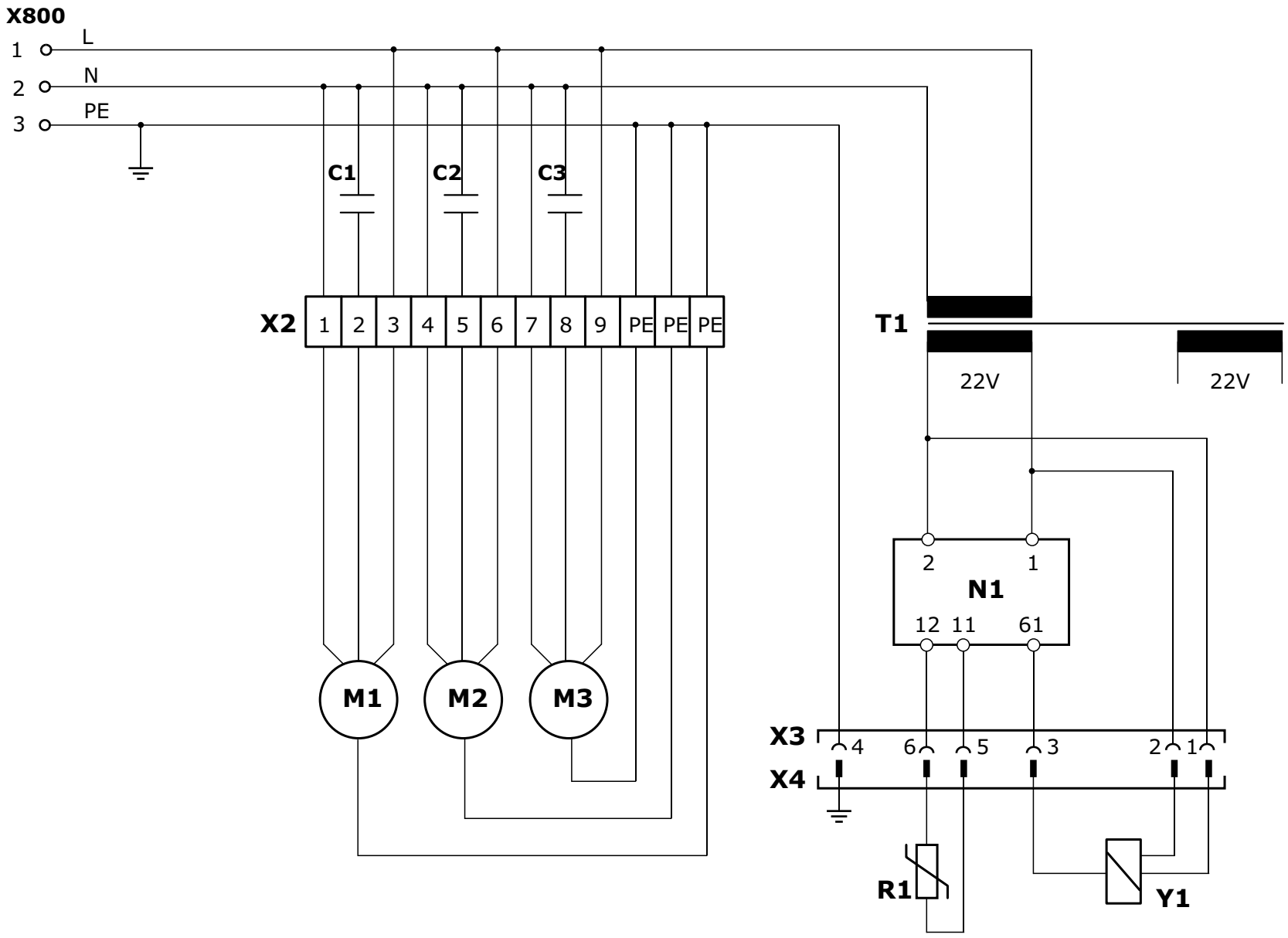

For internal use only. Copyright Siemens, 2010

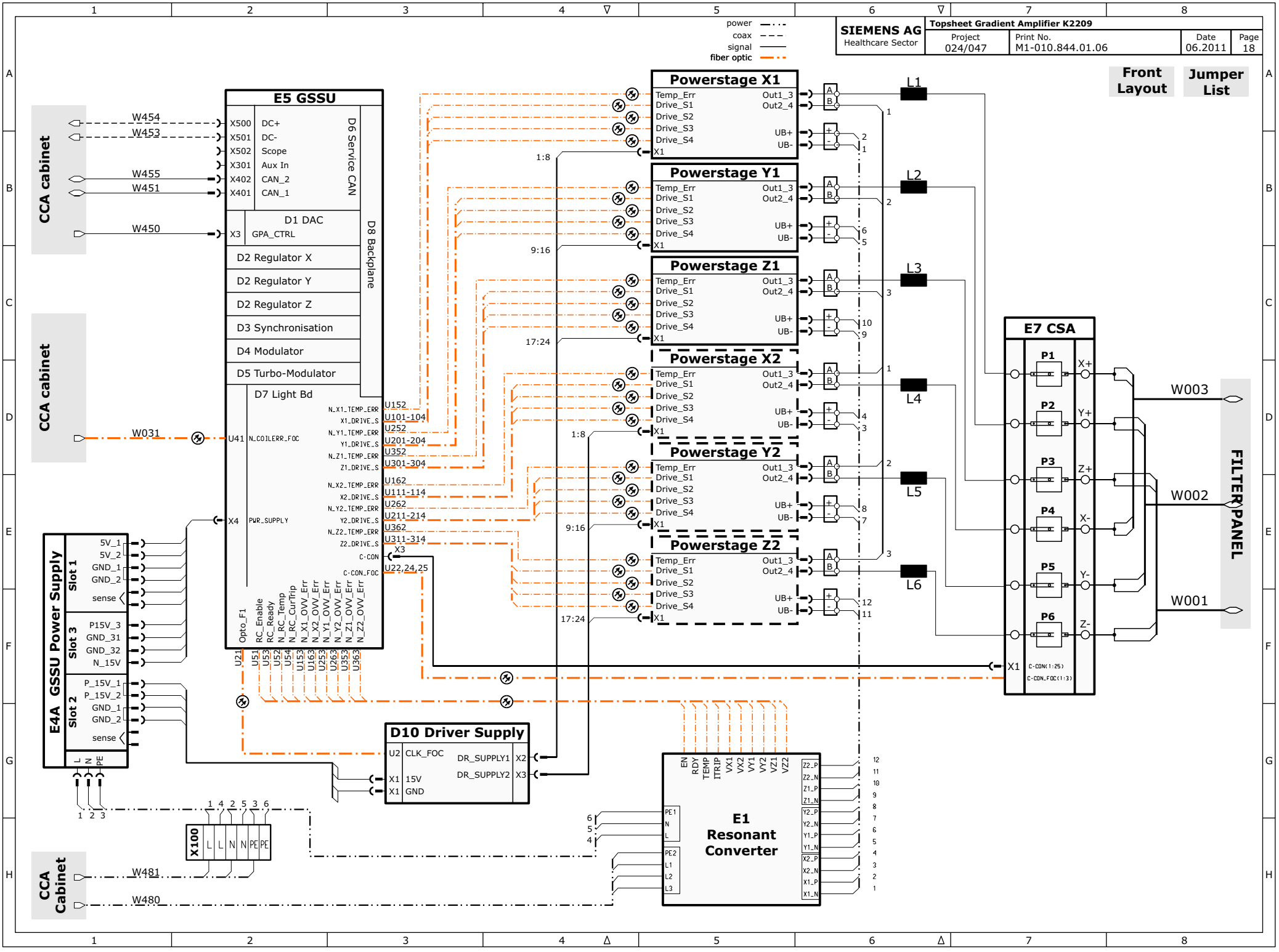

For internal use only. Copyright Siemens, 2010

GPA K2209

Board	Settings	
D1 K2209	X16	2-3
	S1	both DOWN
	S2	both DOWN
	S3	7
	S4	2
D2 K2209	S1	ON 1 8
	S2	ON 1 8
D2 K2209	S1	ON 1 8
	S2	ON 1 8
D2 K2209	S1	ON 1 8
	S2	ON 1 8
D3 K2209	X3	3A - 3B 6A - 6B 9A - 9B
D4 K2209	S1	both DOWN
	S2	both DOWN
	S3	ON 1 8
	S4	ON 1 8
D5 K2209	S1	ON 1 8
	S2	ON 1 8
D6 K2209	X601	1 - 2

Board	Settings	
D10 K2209 Driver Supply	X4	1 - 2

Patient Table

Board	Settings	
D9 K2209	S1	ON 1 10

Gradient Coil Temp Monitor

For internal use only. Copyright Siemens, 2010

Block Diagram

Front View Description GPA K2209

D1 - DAC Board

REF		Description
R153		OFFSET X
R177		OFFSET Y
R200		OFFSET Z
S1		DAC X OFF
		DAC X ON
		DAC Y OFF
		DAC Y ON
S2		DAC Z OFF
		DAC Z ON
		no function
		no function
X3		input: waveform - data and clock
X4		Current Nominal Value X-Axis
X5		Current Nominal Value Y-Axis
X6		Current Nominal Value Z-Axis
X81		Current Nominal Value X-Axis
X82		Current Nominal Value Y-Axis
X83		Current Nominal Value Z-Axis
X84	- not available	no function
X85		DAC out X-Axis
X86		DAC out Y-Axis
X87		DAC out Z-Axis
X88	- not available	no function
X9		ANA_GND

D2 - Regulator

REF		Description
R191		Current Sensor Offset
V24	red	CAV ERROR
V27	yellow	Regulator Loop Error
X3		CAV (Current Actual Value) - (40A/V)
X5		GND
X6		GND
X8		ANA_GND
X9		ANA_GND
X401		(X/Y/Z)1-Switch 1
X402		(X/Y/Z)1-Switch 2
X403		(X/Y/Z)1-Switch 3
X404		(X/Y/Z)1-Switch 4
X405		(X/Y/Z)2-Switch 1
X406		(X/Y/Z)2-Switch 2
X407		(X/Y/Z)2-Switch 3
X408		(X/Y/Z)2-Switch 4
X409		(X/Y/Z)3-Switch 1
X410		(X/Y/Z)3-Switch 2
X411		(X/Y/Z)3-Switch 3
X412		(X/Y/Z)3-Switch 4
X701		Regulator error signal
X702		not connected
X703		Regulator output
X704		not connected
X705		CAV (Current Actual Value) - (40A/V)
X706		not connected
X707		Current Sensor 1
X708		not connected
X709		Current Sensor 2
X710		not connected
X711		not connected
X712		input: Control-test

D3 - Synchronisation

REF		Description
R66		Phase or free wheeling frequency
S1		RESET
V30	green	Vcc o.k.
V31	red	Error N_15V
V32	red	Error P_15V
V33	red	Spare error 1
V34	red	Spare error 2
V35	red	Spare error 3
V36	red	Spare error 4
V37	red	ERROR SYNC
V38	red	ERROR TRIA
X10		TRIA
X11		not connected
X12		CLK 50kHz
X13		not connected
X14		SYNC_CLK 50kHz
X15		not connected
X16		P_15V
X17		not connected
X18		N_15V
X19		not connected
X20		VCC
X21		not connected
X22		ANA_GND
X23		ANA_GND

D4 - Modulator

REF		Description
S1		Modulator X - off
		Modulator X - on
		SERVICE MODE - on
		SERVICE MODE - off
S2		Modulator Y - off
		Modulator Y - on
		Modulator Z - off
		Modulator Z - on
V1	yellow	Service Mode
	yellow	at least one Modulator disabled
V2	red	Overtemperature Powerstage X1, Y1 or Z1
	red	Driver Error X1, Y1 or Z1
V3	red	Spare
	red	Overvoltage Powerstage X1
V4	red	Overvoltage Powerstage Y1
	red	Overvoltage Powerstage Z1
V5	red	Overcurrent X - Axis
	red	Duty Cycle Error Powerstage X1
V6	red	Overcurrent Y - Axis
	red	Duty Cycle Error Powerstage Y1
V7	red	Overcurrent Z - Axis
	red	Duty Cycle Error Powerstage Z1
V8	yellow	Current X positiv
	yellow	Current X negativ
V9	yellow	Current Y positiv
	yellow	Current Y negativ
V10	yellow	Current Z positiv
	yellow	Current Z negativ

D5 - Turbomodulator (only for Upgrade)

REF		Description
V2	red	Overtemperature Powerstage X2, Y2 or Z2
	red	Driver Error X2, Y2 or Z2
V3	red	Spare
	red	Overvoltage Powerstage X2
V4	red	Overvoltage Powerstage Y2
	red	Overvoltage Powerstage Z2
V5	red	not used
	red	not used
V6	red	not used
	red	not used
V7	red	not used
	red	not used

D6 - CAN/Service Board

REF		Description
S401		Select gain, filter
S402		RESCON ON
S403		RESCON OFF
S404		MANUAL PROCESSOR RESET
V403	green	LOADWARE ACTIV
	green	FIRMWARE ACTIV
V407	green	RESCON ON
	green	RESCON ON
V408	yellow	ext. Channel on
	yellow	low pass filter on
V412	yellow	gain 1
	yellow	gain 2
	yellow	gain 5
	yellow	gain 10
V413	red	EPI FAIL
	red	COILERROR
V607	red	POWERFAIL
X301		AUX IN
X401		CAN
X402		CAN
X500		N_LOOP OUT
X501		LOOP OUT
X502		SCOPE

For internal use only. Copyright Siemens, 2010

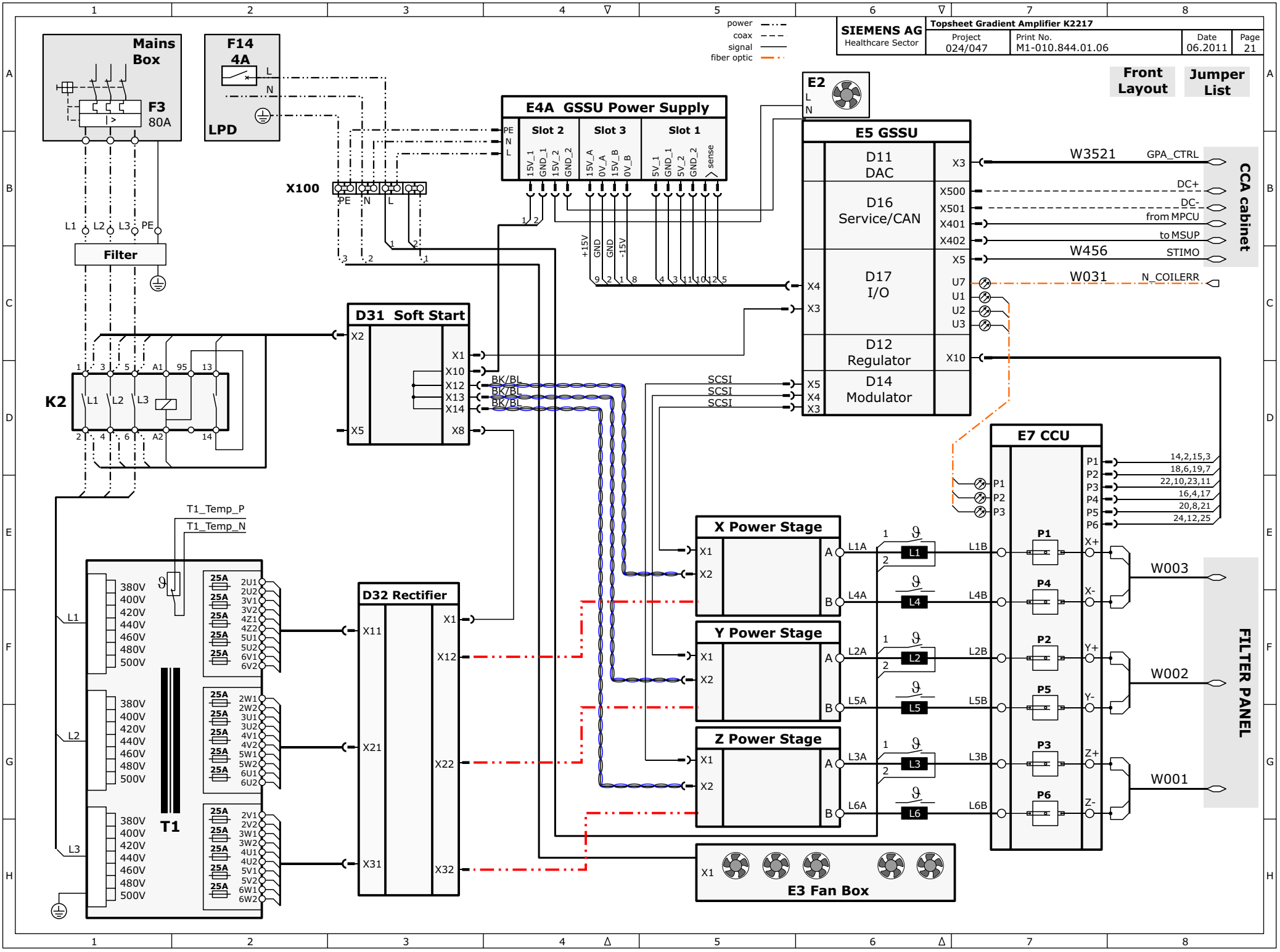

For internal use only. Copyright Siemens, 2010

NUMARIS 4 Cascade Quantum

Board		Settings
D11	X16	2-3
	S1	both DOWN
	S2	both DOWN
	S3	3
	S6	6
D12	S1	ON 1 8
	S2	ON 1 8
	S3	ON 1 8
	S4	ON 1 8
	S5	ON 1 8
	S6	ON 1 8
	S7	ON 1 8
	S8	ON 1 8
	S9	ON 1 8
	X16	1 - 2
	X17	1 - 2
	X18	1 - 2
	X19	1 - 2
	X20	1 - 2
	X21	1 - 2
	X22	1 - 2
	X23	1 - 2
	X24	1 - 2
	X25	18 - 19 21 - 22 24 - 25

Board		Settings
D14	X9	1 - 2
	X10	1 - 2
	X11	6 - 7 18 - 19
	X12	1 - 2
	X13	1 - 2
D16	X3	1 - 2
	X601	1 - 2
D17	X9	11 - 12 19 - 20 21 - 22
	S1	both DOWN
	S2	both DOWN

NUMARIS 4 Cascade Light

Board		Settings
D11	X16	2-3
	S1	both DOWN
	S2	both DOWN
	S3	3
	S6	6
D12	S1	ON 1 8
	S2	ON 1 8
	S3	ON 1 8
	S4	ON 1 8
	S5	ON 1 8
	S6	ON 1 8
	S7	ON 1 8
	S8	ON 1 8
	S9	ON 1 8
	X16	1 - 2
	X17	1 - 2
	X18	1 - 2
	X19	1 - 2
	X20	1 - 2
	X21	1 - 2
	X22	1 - 2
	X23	1 - 2
	X24	1 - 2
	X25	18 - 19 21 - 22 24 - 25

Board		Settings
D14	X9	1 - 2
	X10	1 - 2
	X11	6 - 7 18 - 19
	X12	1 - 2
	X13	1 - 2
D16	X3	1 - 2
	X601	1 - 2
D17	X9	11 - 12 **15 - 16** 19 - 20 21 - 22
	S1	both DOWN
	S2	both DOWN

ME03
1000V - 300A

Block Diagram

E5 K2217 : GSSU -Light

Connected with	Printed board	Jumper	
D18 K2217 X11 , X12	D111 K2217	X16	2 - 3
		S1	both down
		S2	both down
		S3	3
		S4	6
D18 K2217 X21 , X22	D124 K2217	S1	ON 1 8
		S2	ON 1 8
		S3	ON 1 8
		S4	ON 1 8
		S5	ON 1 8
		S6	ON 1 8
		S7	ON 1 8
		S8	ON 1 8
		S9	ON 1 8
		X16	1 - 2
		X17	1 - 2
		X18	1 - 2
		X19	1 - 2
		X20	1 - 2
		X21	1 - 2
		X24	1 - 2
		X22	without Jumper
		X23	without Jumper
		X25	18 - 19
		X25	21 - 22
		X25	24 - 25
D18 K2217 X31 , X32	D142 K2217	X9	without Jumper
		X10	2 - 3
		X11	6 - 7
		X11	18 - 19
		X12	1 - 2
		X13	1 - 2
D18 K2217 X41 , X42	D16 K2217	X3	2 - 3
		X601	1 - 2
D18 K2217 X51 , X52	not used		
D18 K2217 X61 , X62	D17 K2217	X9	11 - 12
		X9	15 - 16
		X9	17 - 18
		X9	19 - 20
		X9	21 - 22
		S1	both down
		S2	both down

For internal use only. Copyright Siemens, 2010

Jumper Settings GPA K2217 for NUMARIS 3.5

Block Diagram

Sonata / 2000V

E5 K2217 : GSSU

Connected with	Printed board	Jumper	
D18 K2217 X11 , X12	D11 K2217	X16	2 - 3
		S1	both down
		S2	both down
		S3	3
		S4	6
D18 K2217 X21 , X22	D12 K2217	S1	ON 1 8
		S2	ON 1 8
		S3	ON 1 8
		S4	ON 1 8
		S5	ON 1 8
		S6	ON 1 8
		S7	ON 1 8
		S8	ON 1 8
		S9	ON 1 8
		X16	1 - 2
		X17	1 - 2
		X18	1 - 2
		X19	1 - 2
		X20	1 - 2
		X21	1 - 2
		X24	1 - 2
		X22	2 - 3
		X23	2 - 3
		X25	18 - 19
		X25	21 - 22
		X25	24 - 25
D18 K2217 X31 , X32	D14 K2217	X9	2 - 3
		X10	2 - 3
		X11	6 - 7
		X11	18 - 19
		X12	1 - 2
		X13	1 - 2
D18 K2217 X41 , X42	D16 K2217	X3	2 - 3
		X601	1 - 2
D18 K2217 X51 , X52	D131 K2217	S1	both down
		X100	1 - 2
		X101	1 - 2
		X102	1 - 2
		X103	1 - 2
		X104	1 - 2
		X105	1 - 2
		X106	2 - 3
		X107	1 - 2
		X108	1 - 2
		X109	1 - 2
		X110	1 - 2
D18 K2217 X61 , X62	D17 K2217	X9	11 - 12
		X9	19 - 20
		X9	21 - 22
		S1	both down
		S2	both down

039T / 2000V

E5 K2217 : GSSU

Connected with	Printed board	Jumper	
D18 K2217 X11 , X12	D11 K2217	X16	2 - 3
		S1	both down
		S2	both down
		S3	3
		S4	6
D18 K2217 X21 , X22	D12 K2217	S1	ON 1 8
		S2	ON 1 8
		S3	ON 1 8
		S4	ON 1 8
		S5	ON 1 8
		S6	ON 1 8
		S7	ON 1 8
		S8	ON 1 8
		S9	ON 1 8
		X16	1 - 2
		X17	1 - 2
		X18	1 - 2
		X19	1 - 2
		X20	1 - 2
		X21	1 - 2
		X24	1 - 2
		X22	2 - 3
		X23	without Jumper
		X25	18 - 19
		X25	21 - 22
		X25	24 - 25
D18 K2217 X31 , X32	D14 K2217	X9	2 - 3
		X10	2 - 3
		X11	6 - 7
		X11	18 - 19
		X12	1 - 2
		X13	1 - 2
D18 K2217 X41 , X42	D16 K2217	X3	2 - 3
		X601	1 - 2
D18 K2217 X51 , X52	D13 K2217	S1	both down
		X100	1 - 2
		X101	1 - 2
		X102	1 - 2
		X103	1 - 2
		X104	1 - 2
		X105	1 - 2
		X106	2 - 3
		X107	1 - 2
		X108	1 - 2
		X109	1 - 2
		X110	1 - 2
D18 K2217 X61 , X62	D17 K2217	X9	11 - 12
		X9	19 - 20
		X9	21 - 22
		S1	both down
		S2	both down

039T / 1000V

E5 K2217 : GSSU

Connected with	Printed board	Jumper	
D18 K2217 X11 , X12	D11 K2217	X16	2 - 3
		S1	both down
		S2	both down
		S3	3
		S4	6
D18 K2217 X21 , X22	D12 K2217	S1	ON 1 8
		S2	ON 1 8
		S3	ON 1 8
		S4	ON 1 8
		S5	ON 1 8
		S6	ON 1 8
		S7	ON 1 8
		S8	ON 1 8
		S9	ON 1 8
		X16	1 - 2
		X17	1 - 2
		X18	1 - 2
		X19	1 - 2
		X20	1 - 2
		X21	1 - 2
		X24	1 - 2
		X22	2 - 3
		X23	without Jumper
		X25	18 - 19
		X25	21 - 22
		X25	24 - 25
D18 K2217 X31 , X32	D14 K2217	X9	without Jumper
		X10	2 - 3
		X11	6 - 7
		X11	18 - 19
		X12	1 - 2
		X13	1 - 2
D18 K2217 X41 , X42	D16 K2217	X3	2 - 3
		X601	1 - 2
D18 K2217 X51 , X52	not used		
D18 K2217 X61 , X62	D17 K2217	X9	11 - 12
		X9	15 - 16
		X9	19 - 20
		X9	21 - 22
		S1	both down
		S2	both down

ME03 / 2000V / 300A

E5 K2217 : GSSU

Connected with	Printed board	Jumper	
D18 K2217 X11 , X12	D11 K2217	X16	2 - 3
		S1	both down
		S2	both down
		S3	3
		S4	6
D18 K2217 X21 , X22	D12 K2217	S1	ON 1 8
		S2	ON 1 8
		S3	ON 1 8
		S4	ON 1 8
		S5	ON 1 8
		S6	ON 1 8
		S7	ON 1 8
		S8	ON 1 8
		S9	ON 1 8
		X16	1 - 2
		X17	1 - 2
		X18	1 - 2
		X19	1 - 2
		X20	1 - 2
		X21	1 - 2
		X24	1 - 2
		X22	without jumper
		X23	without jumper
		X25	18 - 19
		X25	21 - 22
		X25	24 - 25
D18 K2217 X31 , X32	D14 K2217	X9	2 - 3
		X10	2 - 3
		X11	6 - 7
		X11	18 - 19
		X12	1 - 2
		X13	1 - 2
D18 K2217 X41 , X42	D16 K2217	X3	2 - 3
		X601	1 - 2
D18 K2217 X51 , X52	not used		
D18 K2217 X61 , X62	D17 K2217	X9	11 - 12
		X9	13 - 14
		X9	15 - 16
		X9	17 - 18
		X9	19 - 20
		X9	21 - 22
		S1	both down
		S2	both down

Allegra/ 2000V

E5 K2217 : GSSU

Connected with	Printed board	Jumper	
D18 K2217 X11 , X12	D11 K2217	X16	2 - 3
		S1	both down
		S2	both down
		S3	3
		S4	6
D18 K2217 X21 , X22	D123 K2217	S1	ON 1 8
		S2	ON 1 8
		S3	ON 1 8
		S4	ON 1 8
		S5	ON 1 8
		S6	ON 1 8
		S7	ON 1 8
		S8	ON 1 8
		S9	ON 1 8
		X16	1 - 2
		X17	1 - 2
		X18	1 - 2
		X19	1 - 2
		X20	1 - 2
		X21	1 - 2
		X24	1 - 2
		X22	without Jumper
		X23	2 - 3
		X25	18 - 19
		X25	21 - 22
		X25	24 - 25
D18 K2217 X31 , X32	D14 K2217	X9	2 - 3
		X10	2 - 3
		X11	6 - 7
		X11	18 - 19
		X12	1 - 2
		X13	1 - 2
D18 K2217 X41 , X42	D16 K2217	X3	2 - 3
		X601	1 - 2
D18 K2217 X51 , X52	D122 K2217	S1	both down
		X100	1 - 2
		X101	1 - 2
		X102	1 - 2
		X103	1 - 2
		X104	1 - 2
		X105	1 - 2
		X106	2 - 3
		X107	1 - 2
		X108	1 - 2
		X109	1 - 2
		X110	1 - 2
D18 K2217 X61 , X62	D17 K2217	X9	11 - 12
		X9	19 - 20
		X9	21 - 22
		S1	both down
		S2	both down

For internal use only. Copyright Siemens, 2010

GPA K2217

Block Diagram

D11 - DAC Board

REF		Descript.
X3		waveform data and clock
S1		DAC X OFF
		DAC X ON
		DAC Y OFF
		DAC Y ON
S2		DAC Z OFF
		DAC Z ON
		no function
		no function
R153		OFFSET X
R177		OFFSET Y
R200		OFFSET Z
X81		Curr. Nom. Val. X-Axis
X82		Curr. Nom. Val. Y-Axis
X83		Curr. Nom. Val. Z-Axis
X84		n.c.
X85		DAC out X-Axis
X86		DAC out Y-Axis
X87		DAC out Z-Axis
X88		n.c.
X9		ANA_GND
X4		Curr. Nom. Val. X-Axis
X5		Curr. Nom. Val. Y-Axis
X6		Curr. Nom. Val. Z-Axis

D12 - Regulator

REF		Description
V130		IMAX_X
		IMAX_Y
V131		IMAX_Z
		CAV_ERR_X
V132		CAV_ERR_Y
		CAV_ERR_Z
V133		DUCY_X
		DUCY_Y
V134		DUCY_Z
		OHMLOSS
V135		LOOP_ERR_X
		LOOP_ERR_Y
V136		LOOP_ERR_Z
		REG_ON_X
V137		REG_ON_Y
		REG_ON_Z
V159		CURRENTFLOW
R155		Cur. Sensor Offset X
R189		Cur. Sensor Offset Y
R223		Cur. Sensor Offset Z
X61		ERRORSIG_X
X62		n.c.
X63		REGOUT_X
X64		n.c.
X65		CAV X
X66		n.c.
X67		EXT.SIG.IN.X
X71		ERRORSIG_Y
X72		n.c.
X73		REGOUT_Y
X74		n.c.
X75		CAV Y
X76		n.c.
X77		EXT.SIG.IN.Y
X81		ERRORSIG_Z
X82		n.c.
X83		REGOUT_Z
X84		n.c.
X85		CAV Z
X86		n.c.
X87		EXT.SIG.IN.Z
X15		GND
X14		GND
X11		CAV X
X12		CAV Y
X13		CAV Z
X10		Connected with E7 (Current Sensor)

D14(2) - Modulator

REF		Description
V57		CLOCK Err.
		Mod. Err.
V58		+15V Err.
		-15V Err.
V59		SYNC Err.
		5V ok
V60		ERR_LED1
		ERR_LED2
V61		L1
		L2
V62		L3
		L4
V63		L5
		L6
V64		L7
		L8
V60		continious light = Supervision not configurated
V60		flash light ERR_LED1
V61		N_INT_INT
		OFF_X, N_MODON_X
V62		EMMI
		Pullprotection
V63		frequency X
		Powerst.-temp. X
V64		Powerst.-voltage X
		Driver X
V60		flash light ERR_LED2
V61		N_SPARE
		OFF_Y, N_MODON_Y
V62		Output disable
		Modulator defective
V63		frequency Y
		Powerst.-temp. Y
V64		Powerst.-voltage Y
		Driver Y
V60		flash light ERR_LED1 + ERR_LED2
V61		Mod. Spare 1
		OFF_Z, N_MODON_Z
V62		Mod._Spare 3
		Mod._spare2
V63		frequency Z
		Powerst.-temp. Z
V64		Powerst.-voltage Z
		Driver Z
X3		Connected with Powerstage X-Axis
X4		Connected with Powerstage Y-Axis
X5		Connected with Powerstage Z-Axis

D16-CAN & Serv.

REF		Descript.
V408		external Channal on
		lowpass on
V412		gain 1
		gain 2
		gain 5
		gain 10
S401		Tipp gain filter
X301		AUX IN
X500		N_LOOP OUT
X501		LOOP OUT
X502		SCOPE
S402		POWER ON
V407		POWER ON
		POWER ON
S403		POWER OFF
V413		FASTOFF
		COILERROR
V607		POWERFAIL
S404		MANUAL PROCESSOR RESET
V403		LOADWARE ACTIV
		FIRMWARE ACTIV
X401		CAN
X402		CAN

D17 I/O-Board

REF		Descript.
V27		Rect.Temp.
		Trafo Temp.
V38		Coilerr.
		Filterfan
V40		EMMI
		DB_WDG_ERR
V14		Serv. Mode
S1		MOD X OFF
		MOD X ON
		MOD Y OFF
		MOD Y ON
S2		MOD Z OFF
		MOD Z ON
		Service Mode ON
		Service Mode OFF
S3		RESET
X61		+15V
X62		n.c.
X63		+5V
X64		n.c.
X65		-15V
X701		OVV_X-Input
X702		OVV_Y-Input
X703		OVV_Z-Input
X704		n.c.
X705		Systemclock
X706		n.c.
X707		MCLOCK
X708		n.c.
X709		FSYNC
X710		n.c.
X711		FAUX
X712		n.c.
X713		N_EMMI
X8		GND
X5		Connection to Stimulationsmon.
X3		Connection to D31 (Soft Start Unit)

D13(1) Stim.Mon.

REF		Descript.
V30		High Level On
V26		STIMU OFF
V24		SWITCH OFF
S1		STIMU OFF
		STIMU ON
		HIGH LEVEL OFF
		HIGH LEVEL ON
X4		DIFF X
X5		n.c.
X6		STW X
X7		n.c.
X8		DIFF Y
X9		n.c.
X10		STW Y
X11		n.c.
X12		DIFF Z
X13		n.c.
X14		STW Z
X15		n.c.
X16		SUMME 1
X17		n.c.
X18		SUMME 2
X19		n.c.
X20		SUMME 3
X21		n.c.
X22		SUMME 4
X23		n.c.
X24		GPA ON
X25		n.c.
X58		GND
X59		GND
X3		Connection to I_/O-Board
U1		
U2		
U3		
U4		

only on NUM3.5 systems with Quantum gradients

Front View Description GPA K2217

For internal use only. Copyright Siemens, 2010

Cooling System Block Diagram

Harmony / Symphony

R = flow reducer
R* = 1rst production run cabinets
R = Schroff cabinets

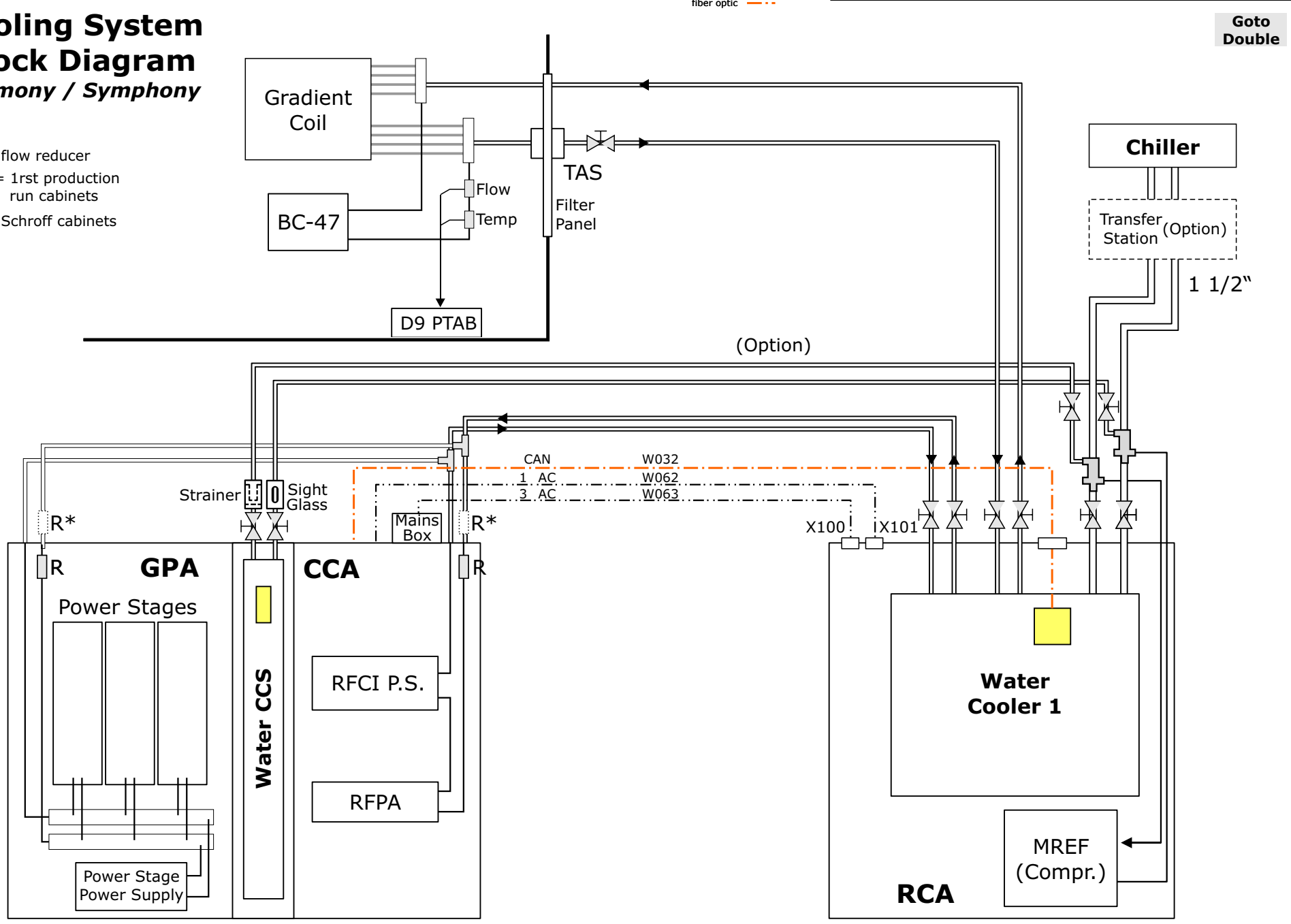

For internal use only. Copyright Siemens, 2010

Goto Single

Cooling System Block Diagram

Sonata/Trio/Allegra

R = flow reducer
R* = 1rst production run cabinets
R = Schroff cabinets

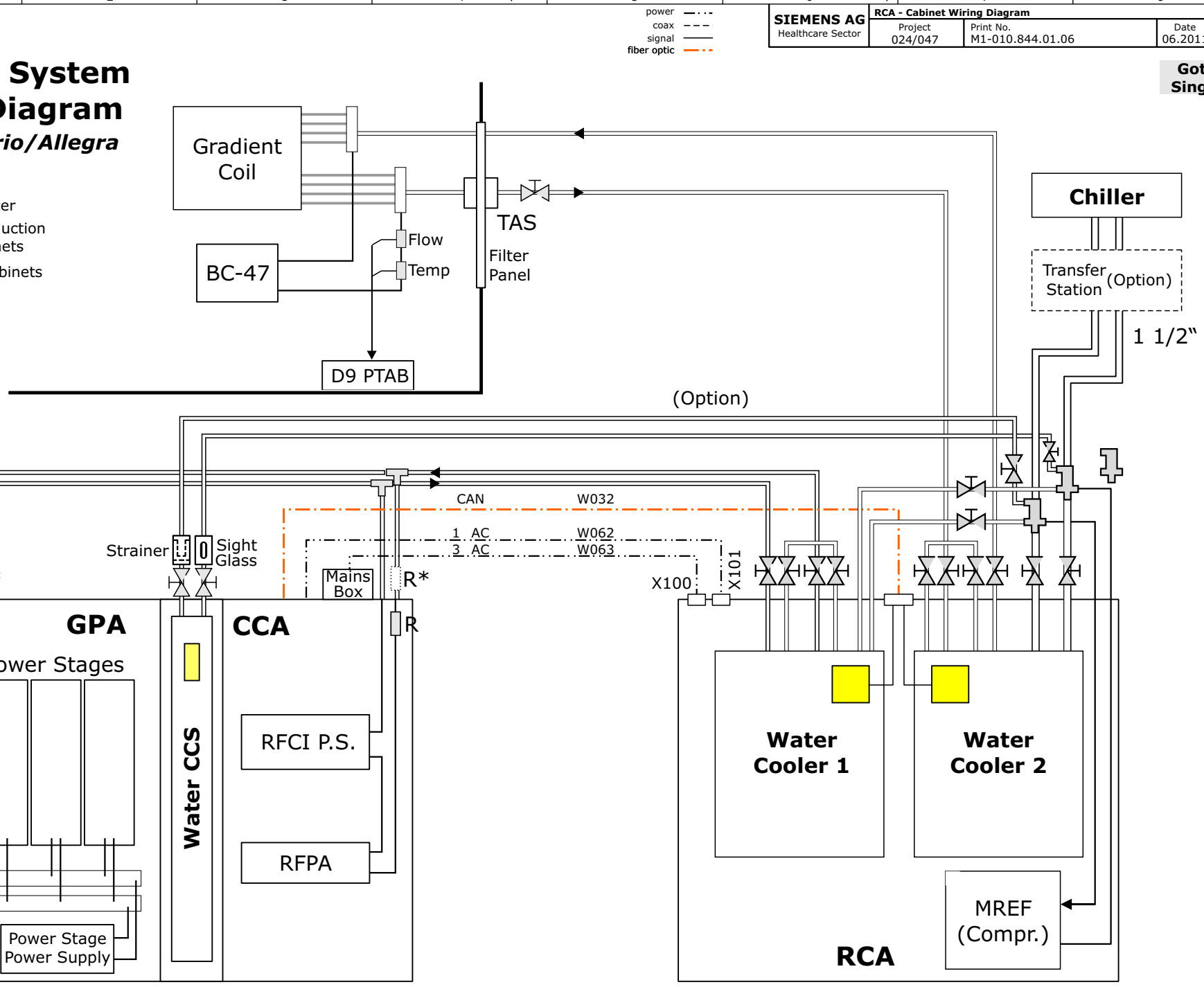

For internal use only. Copyright Siemens, 2010

RCA Cabinet Wiring

Leybold Compressor

Goto APD

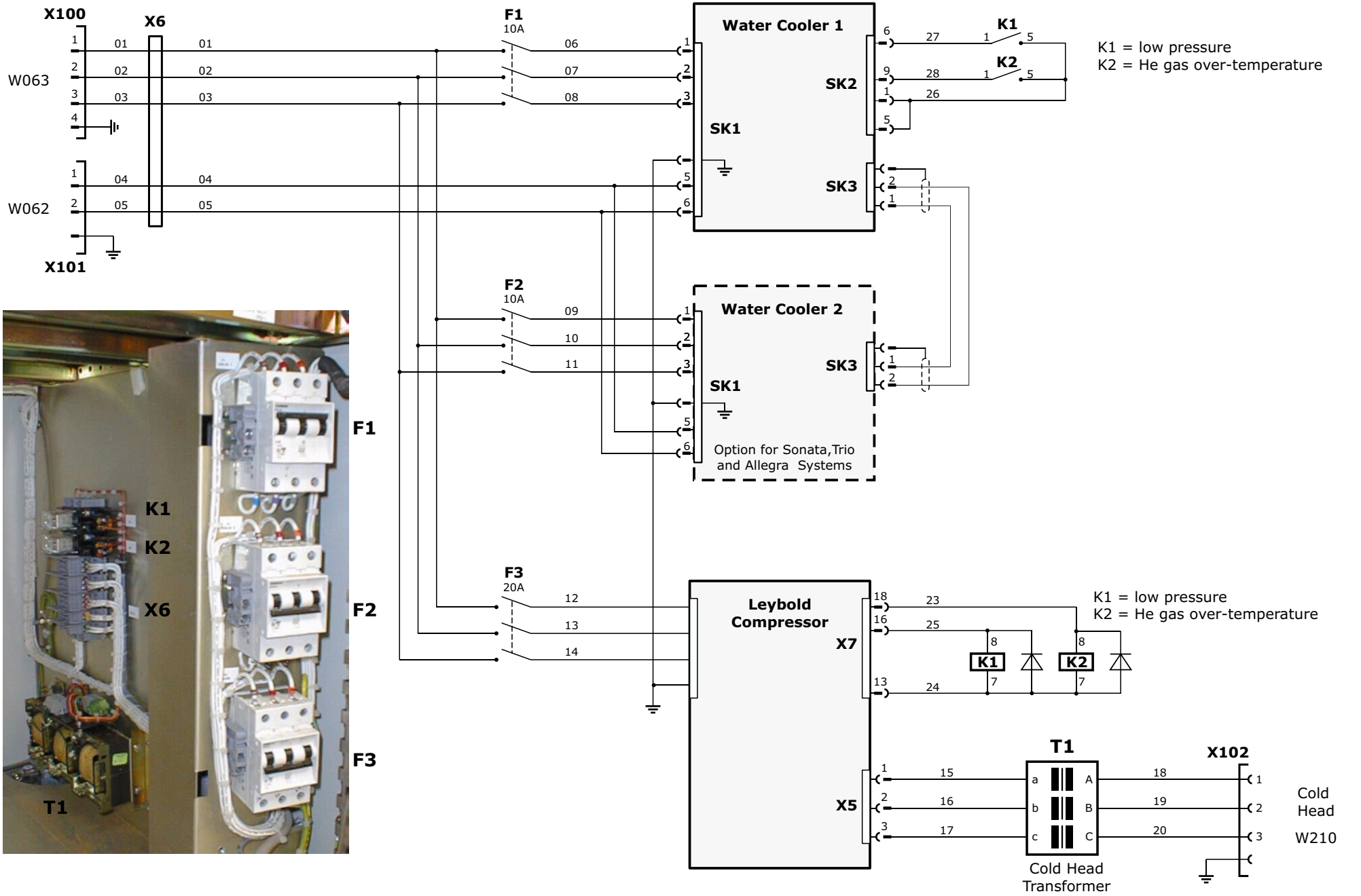

For internal use only. Copyright Siemens, 2010

RCA Cabinet Wiring
APD Compressor

SIEMENS AG Healthcare Sector	RCA - Cabinet Wiring Diagram			
	Project 024/047	Print No. M1-010.844.01.06	Date 06.2011	Page 28

Goto Leybold

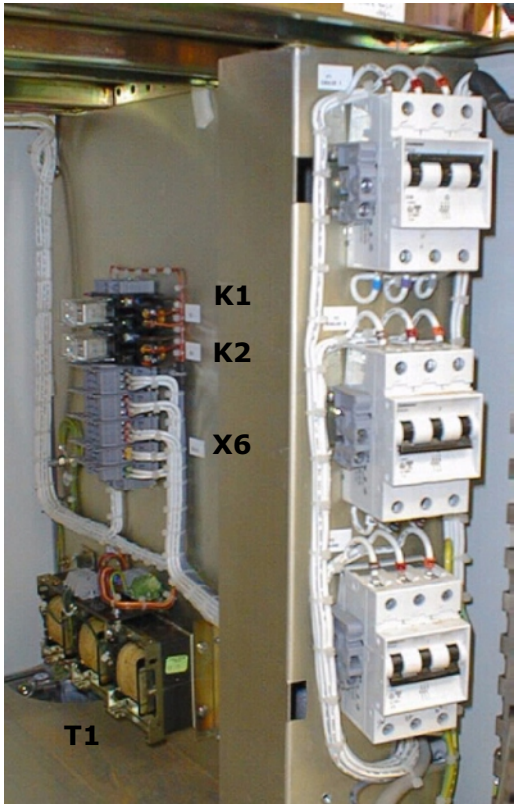

X100 — W063 (1–4), W062 (1–2) — X101

X6: 01, 02, 03, 04, 05

F1 10A: 06, 07, 08

F2 10A: 09, 10, 11

F3 20A: 12, 13, 14

Water Cooler 1: SK1, SK2, SK3

Water Cooler 2: SK1, SK3

Option for Sonata,Trio and Allegra Systems

K1 P 27, K2 T 28, COM 26

LOGO

Q1/2, Q2/2, Q1/1, Q2/1, Q3/1 30

LINK AS REQUIRED
FOR RS TIME
I3 30SEC (TEST)
I4 1.5HRS
I5 3.0HRS

M 24, L+ 30, Q3/2 31, I1 25, I2 23, I3 32, I4 30, I5 34, I6

AWD

APD Compressor

X7: 24 0V, 25 +24V, 3 RS, 16 P, 18 T, 6 Compressor Remote ON/OFF, 19 STATUS

TEST

X5: 1 15, 2 16, 3 17

T1 Cold Head Transformer: a–A 18, b–B 19, c–C 20

X102 Cold Head W210: 1, 2, 3

For internal use only. Copyright Siemens, 2010

Top Panel Layout (Schroff)

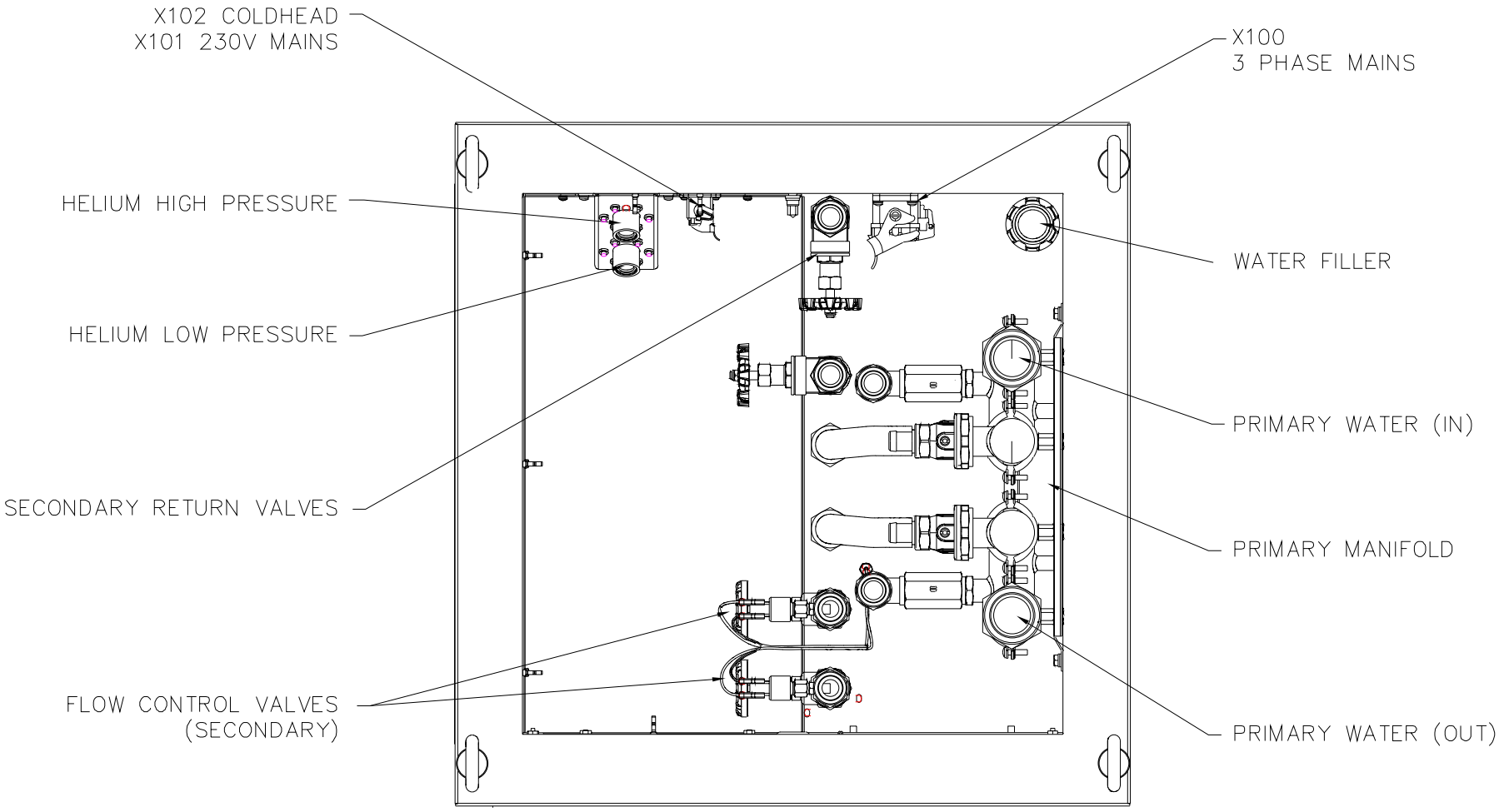

For internal use only. Copyright Siemens, 2010

Secondary Water Cooler Block Diagram

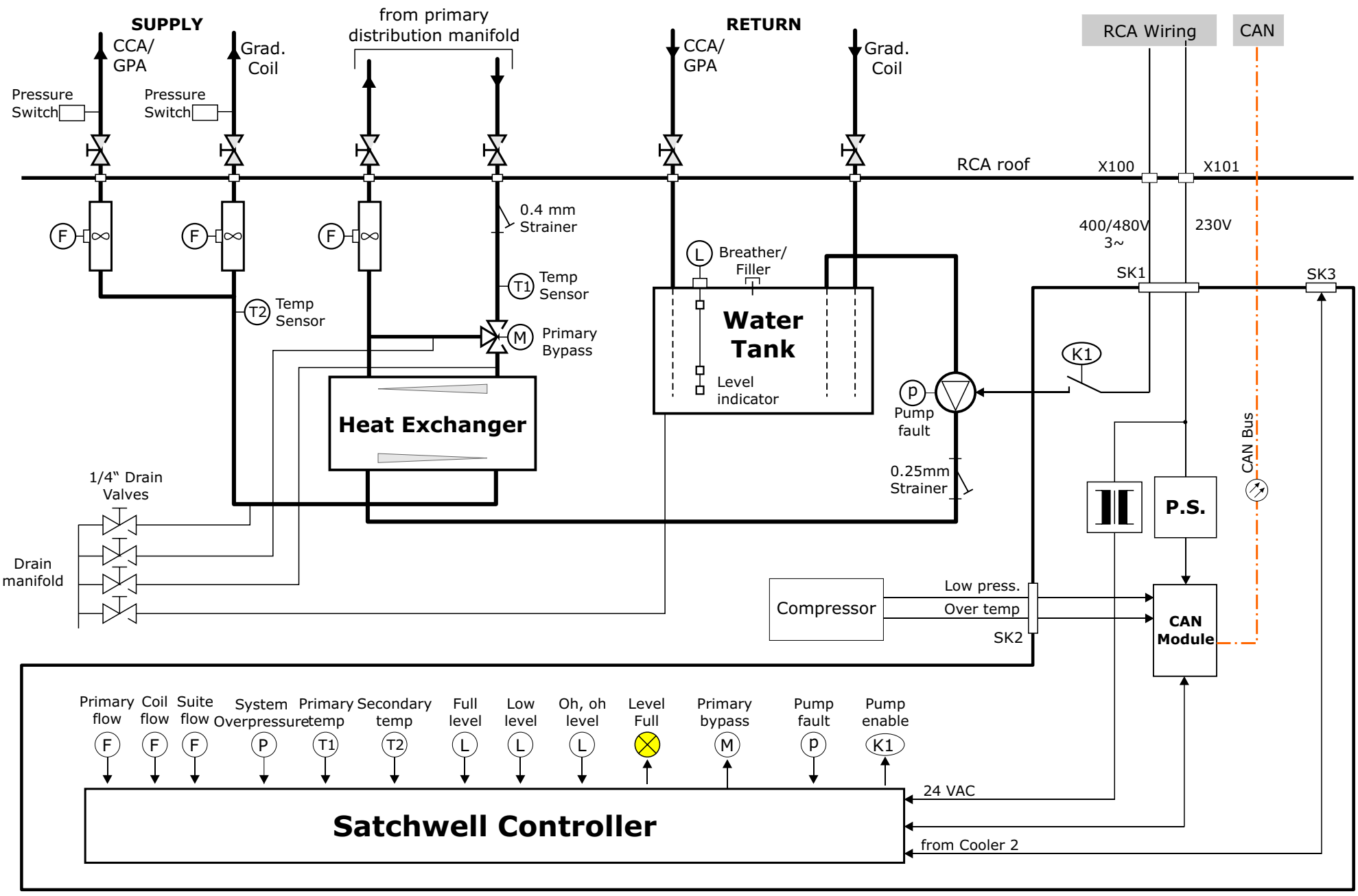

For internal use only. Copyright Siemens, 2010

RCA Cooler Wiring

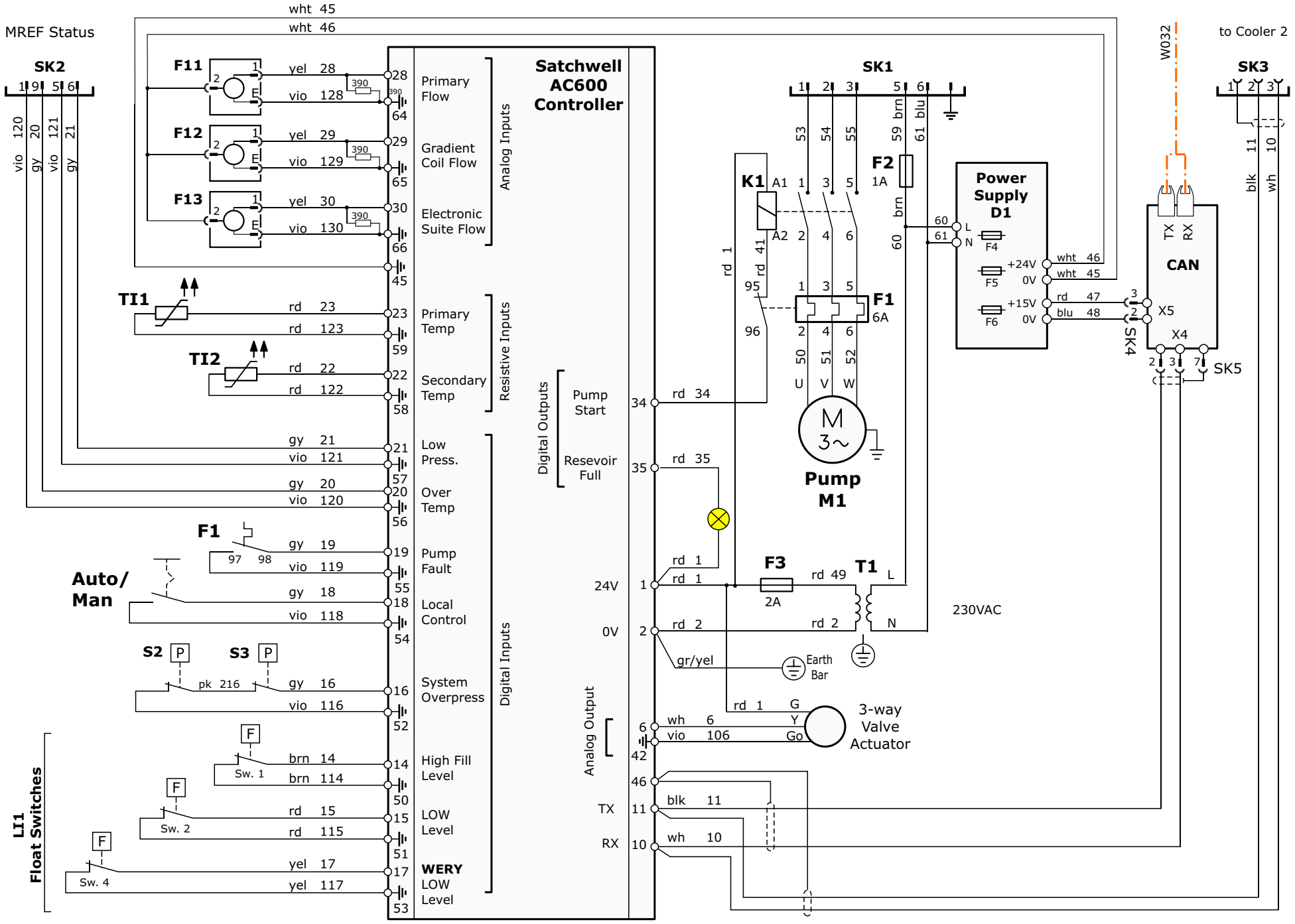

For internal use only. Copyright Siemens, 2010

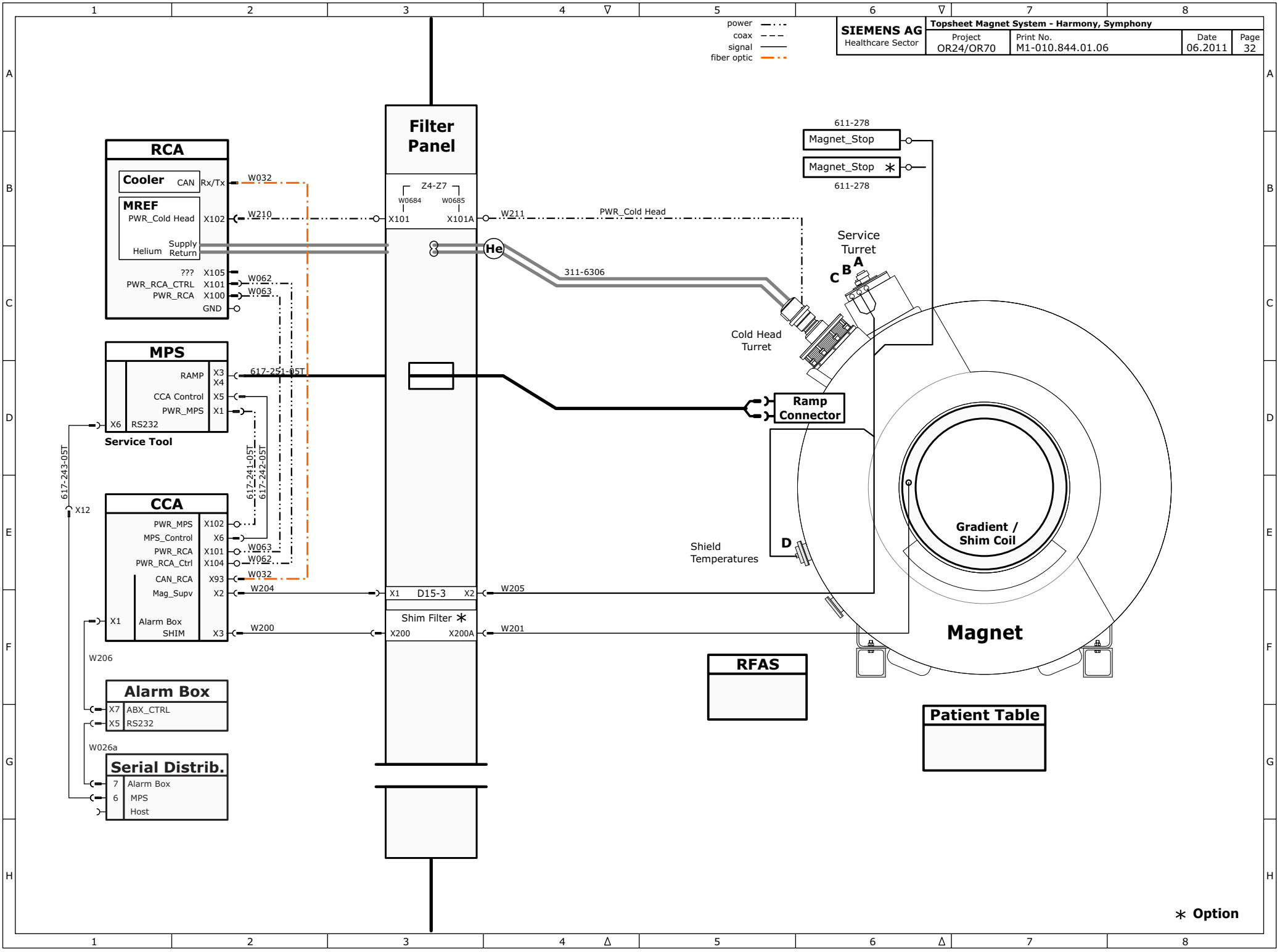

For internal use only. Copyright Siemens, 2010

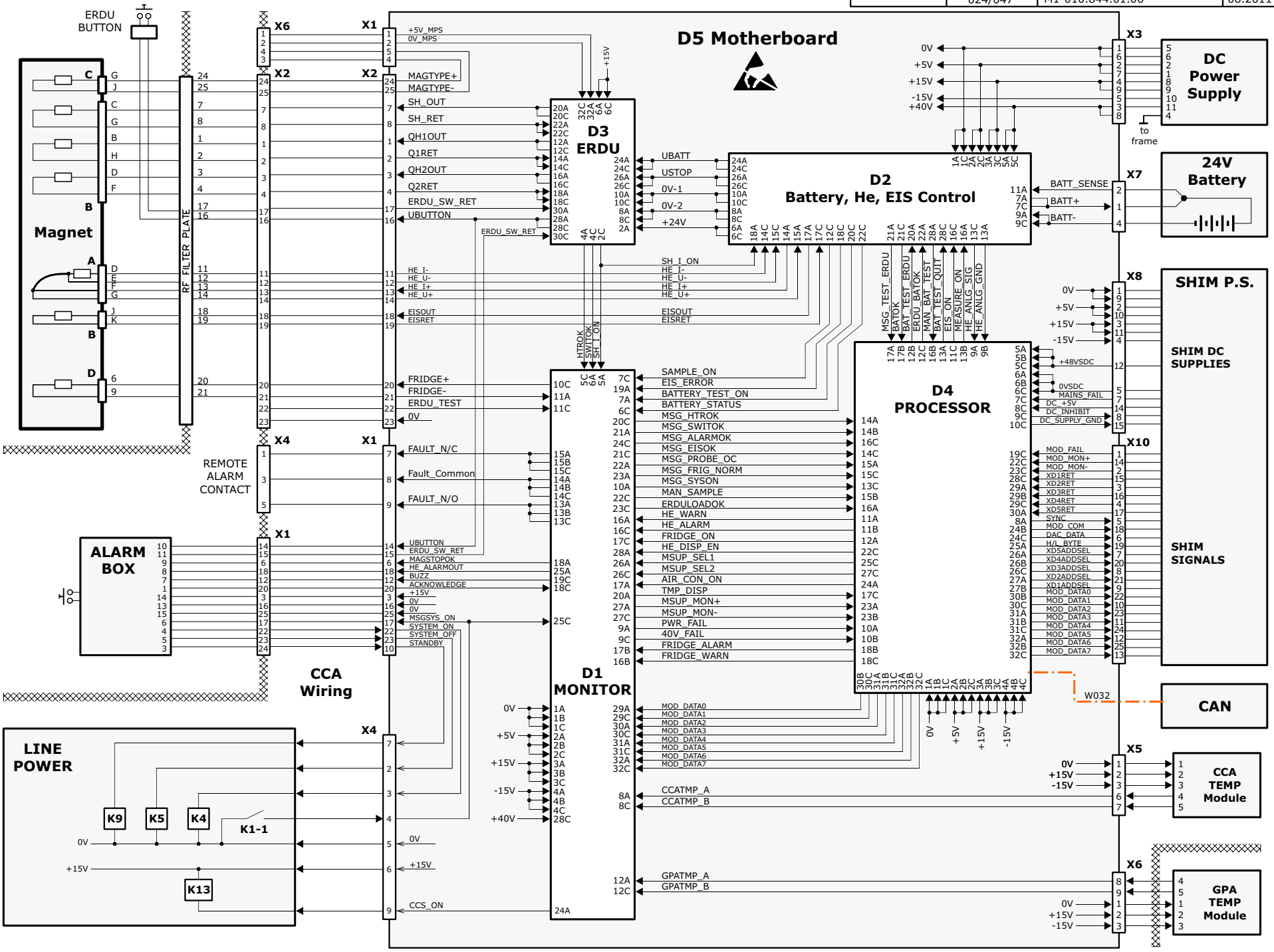

For internal use only. Copyright Siemens, 2010

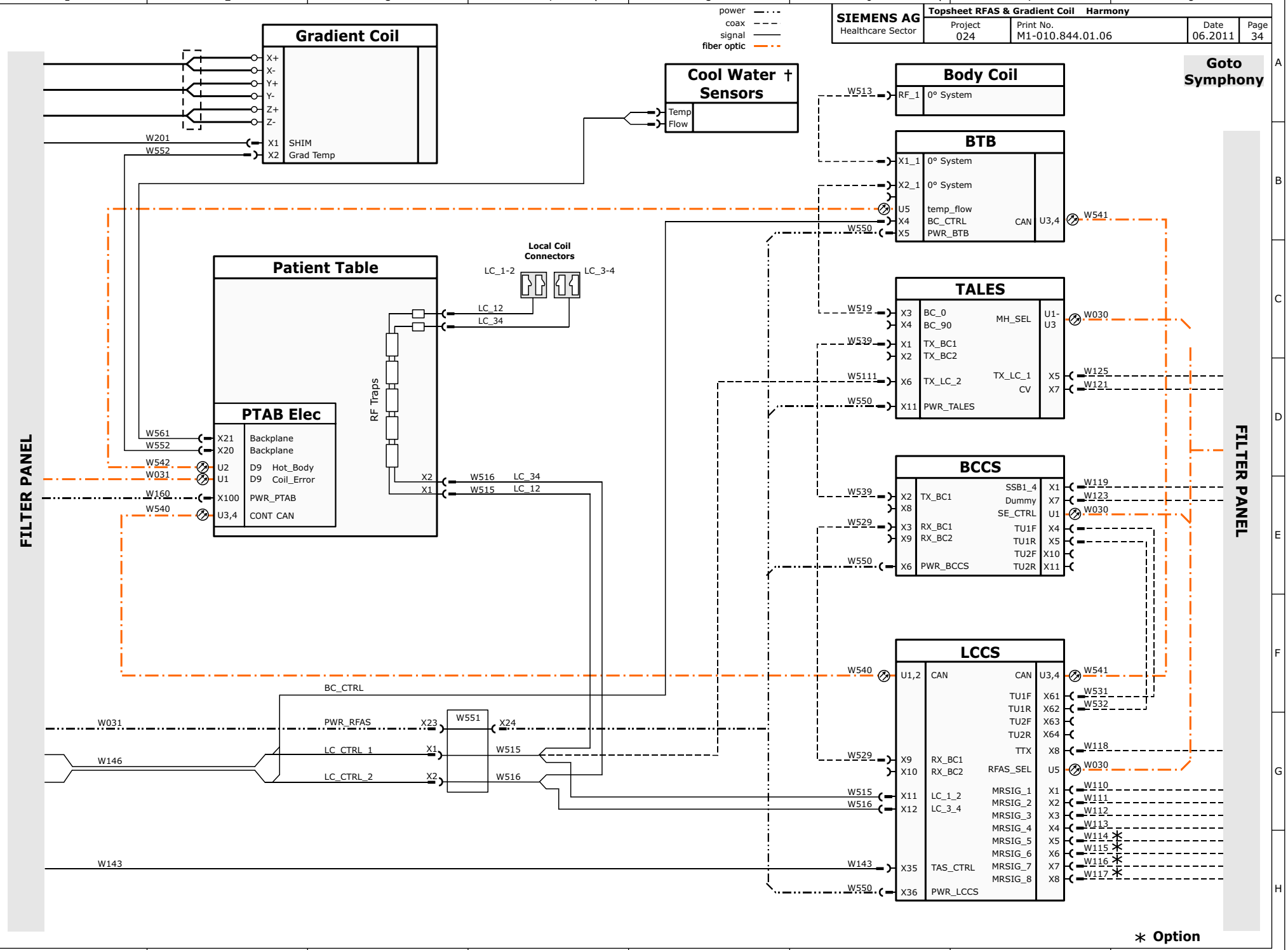

For internal use only. Copyright Siemens, 2010

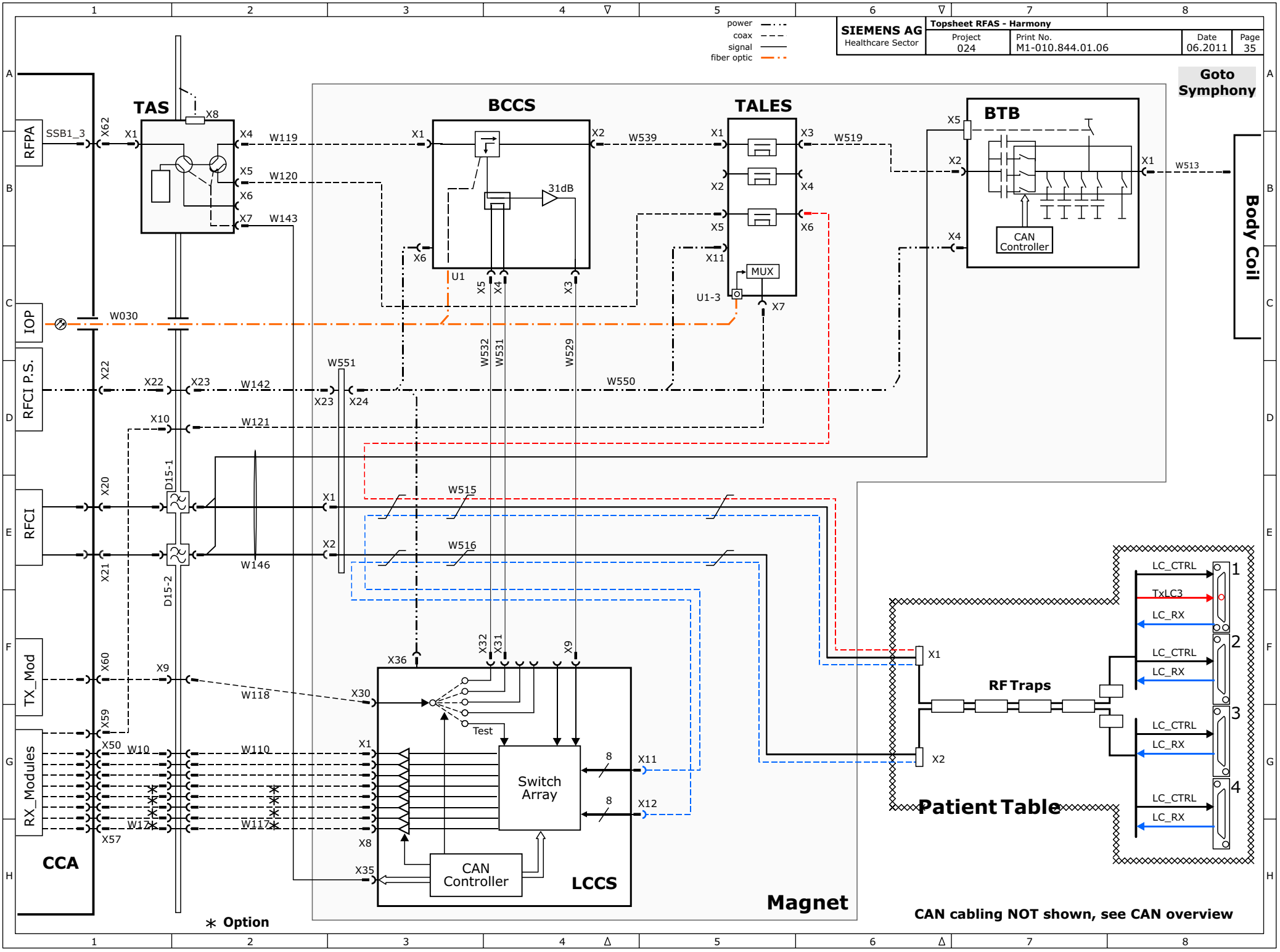

For internal use only. Copyright Siemens, 2010

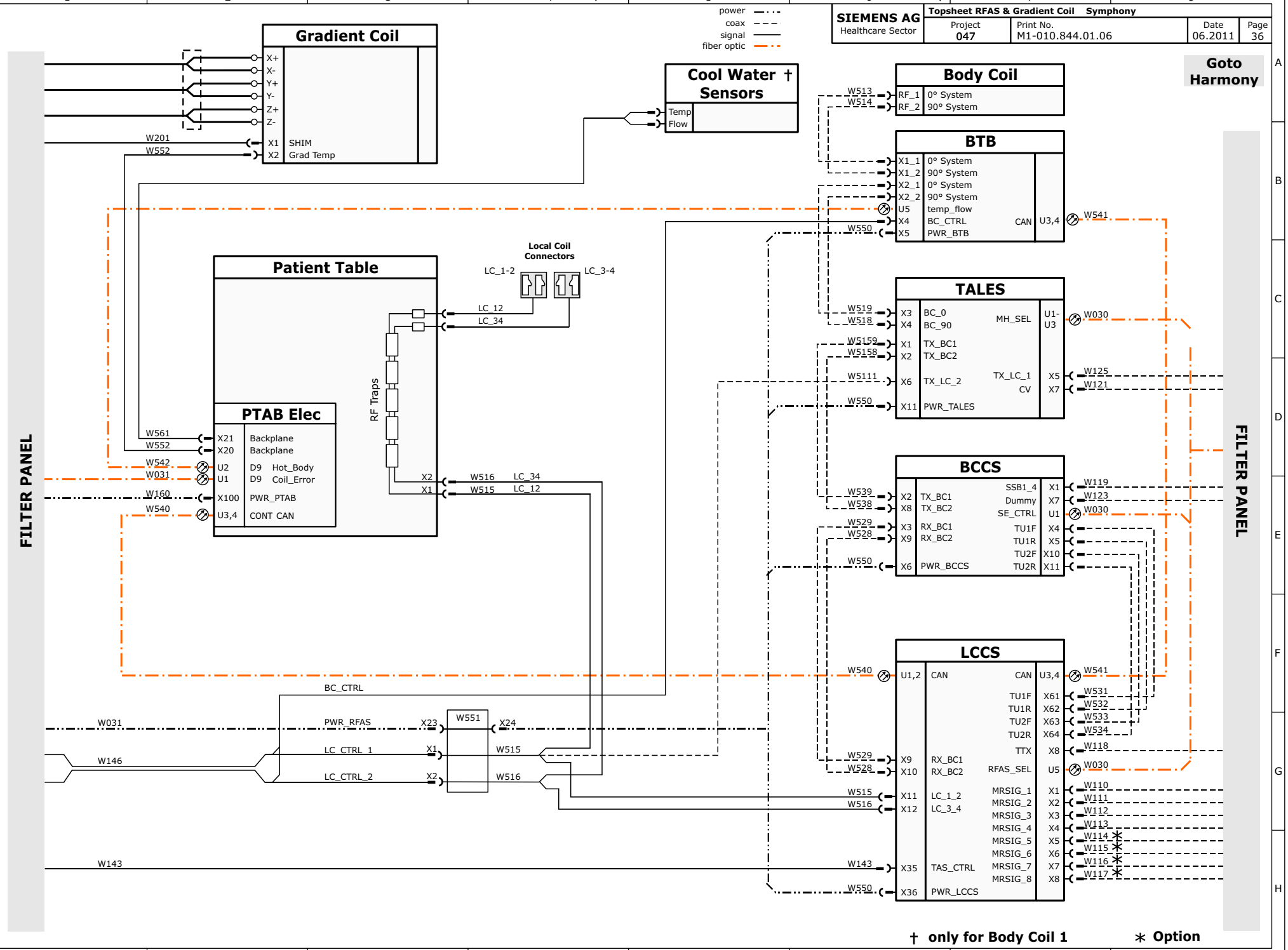

† only for Body Coil 1

* Option

For internal use only. Copyright Siemens, 2010

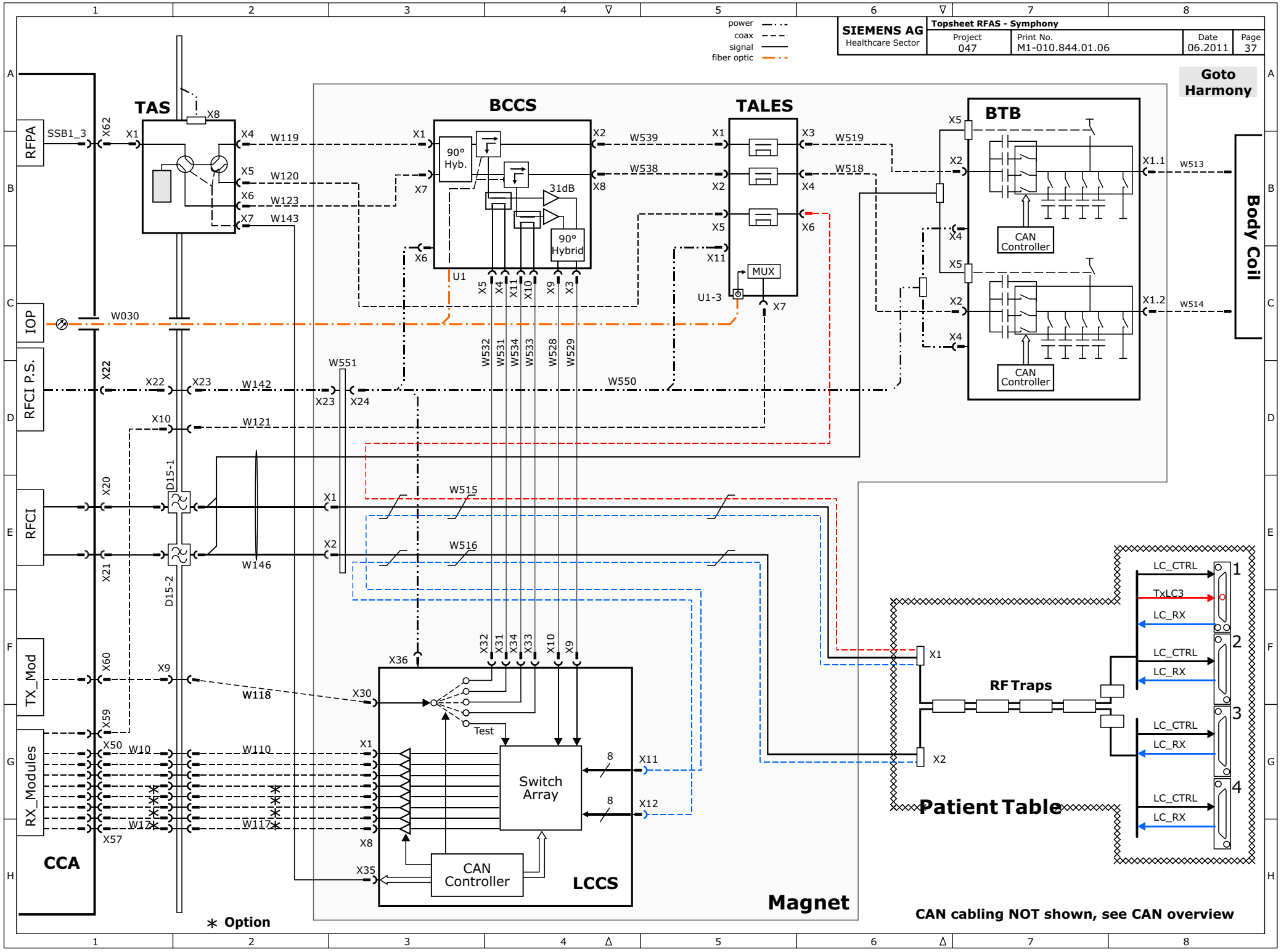

For internal use only. Copyright Siemens, 2010

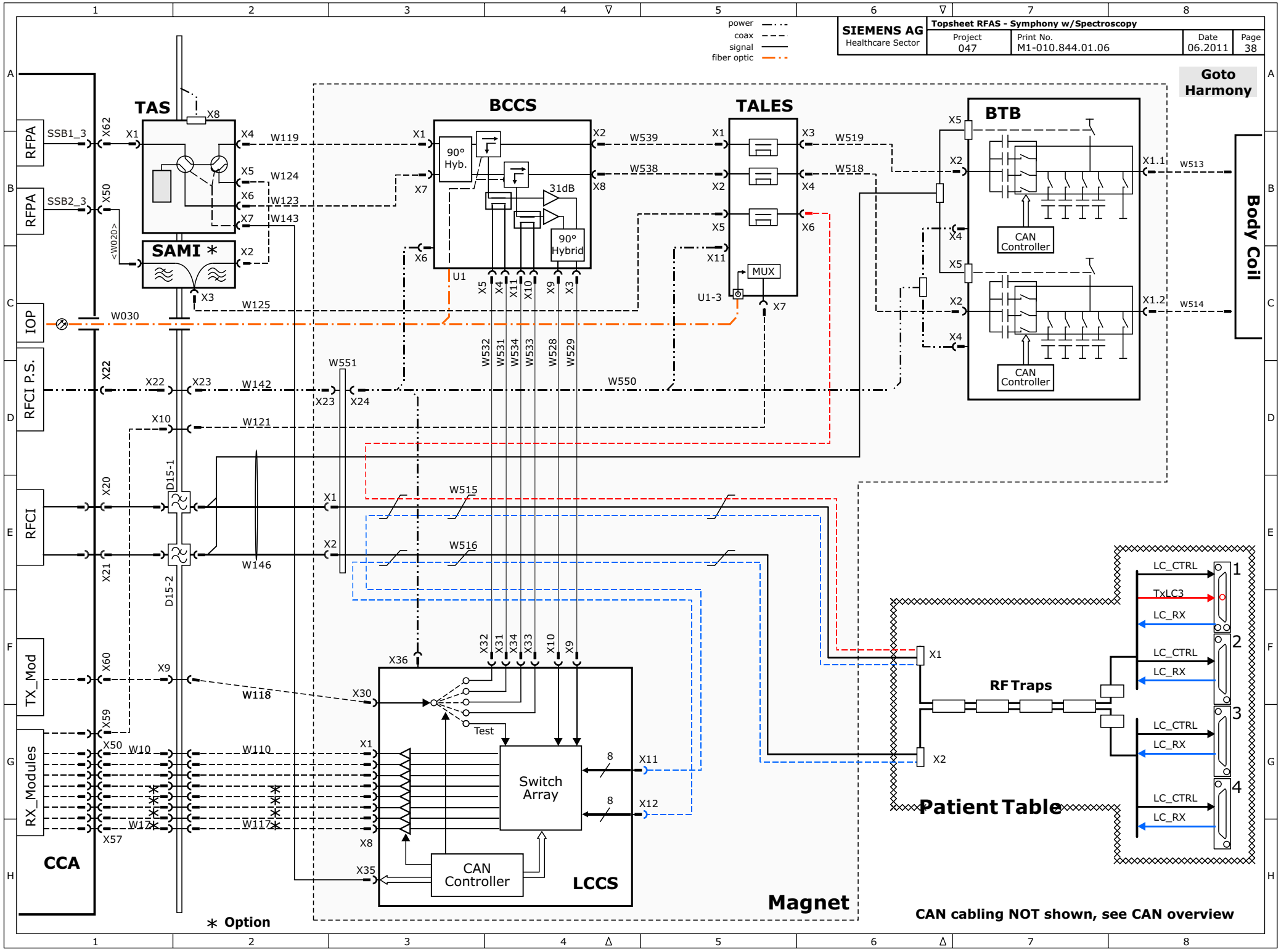

For internal use only. Copyright Siemens, 2010

Breast Array

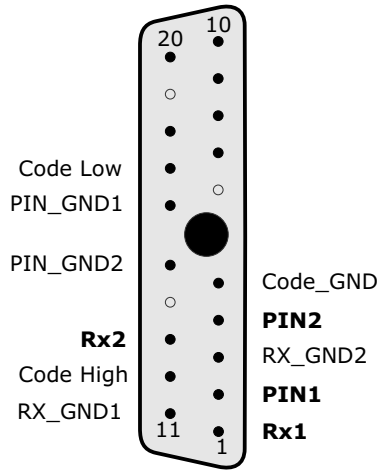

Head Array

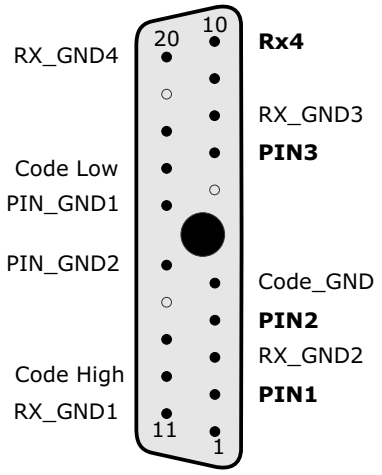

Spine Array

X3

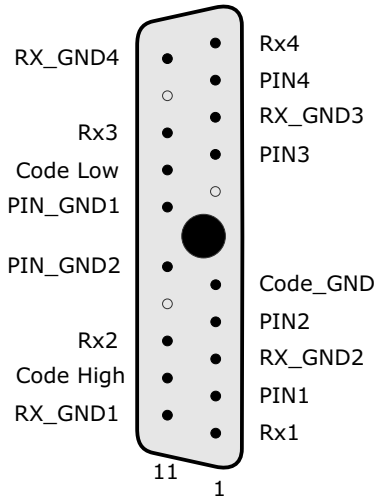

X2

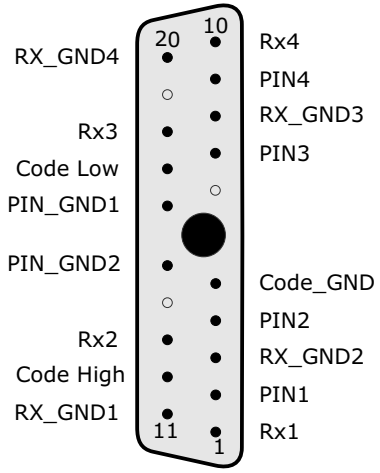

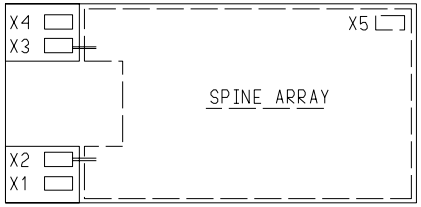

Neck Array
Body Array

X5

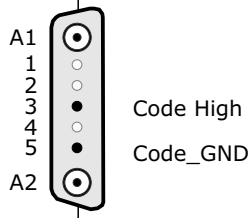

A1 is connected to the RX3 and RX3_Gnd signals of X3. The PIN3 and PIND_Gnd1 signals are superimposed on A1 as well.

A2 is connected to the RX4 and RX4_Gnd signals of X3 and also includes the +10V supply.

Extremity Coil

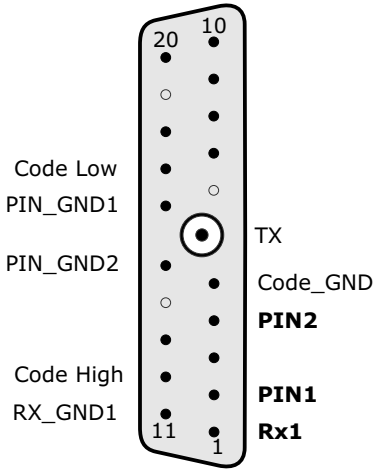

For internal use only. Copyright Siemens, 2010

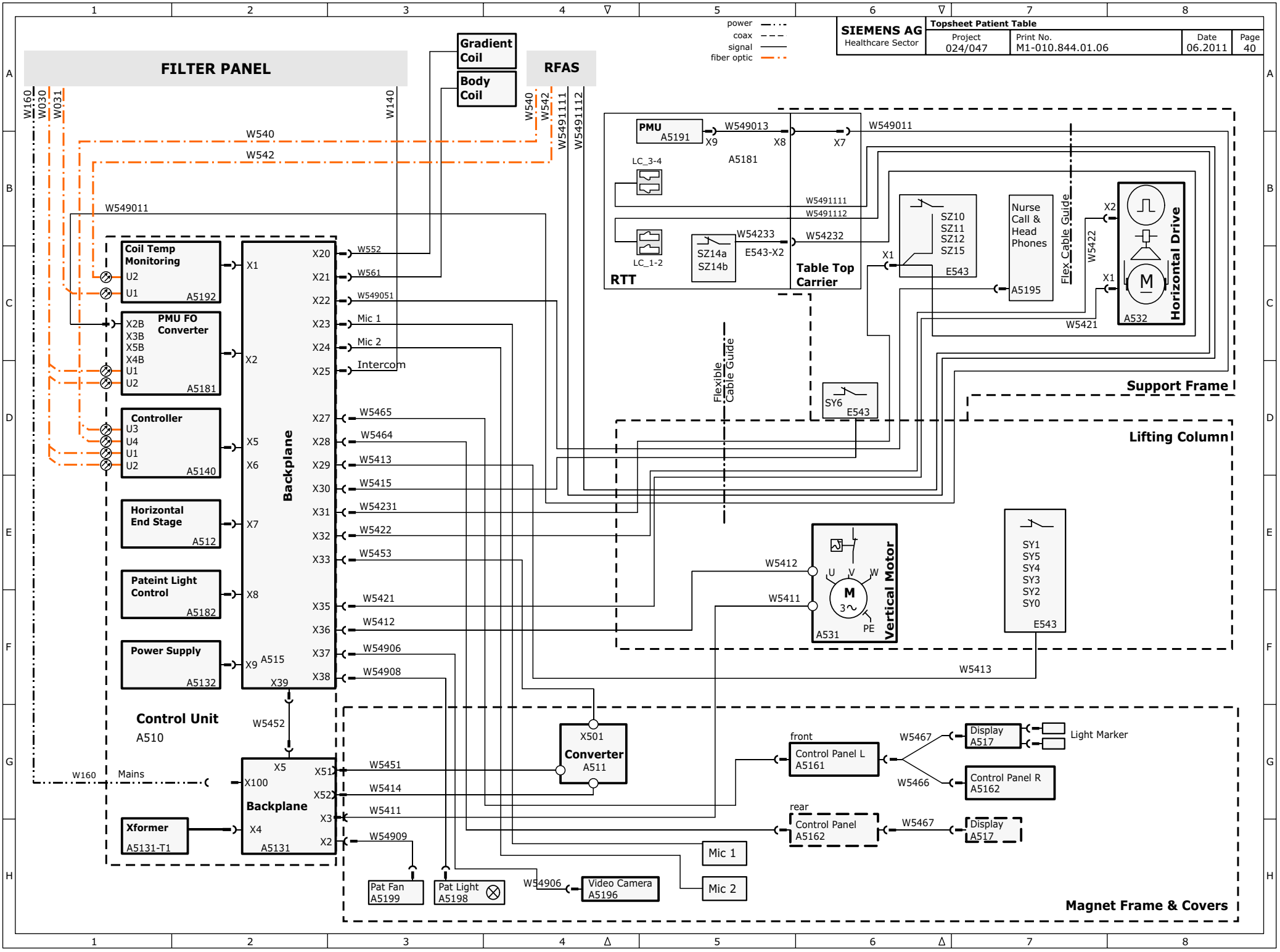

For internal use only. Copyright Siemens, 2010

Board Layout

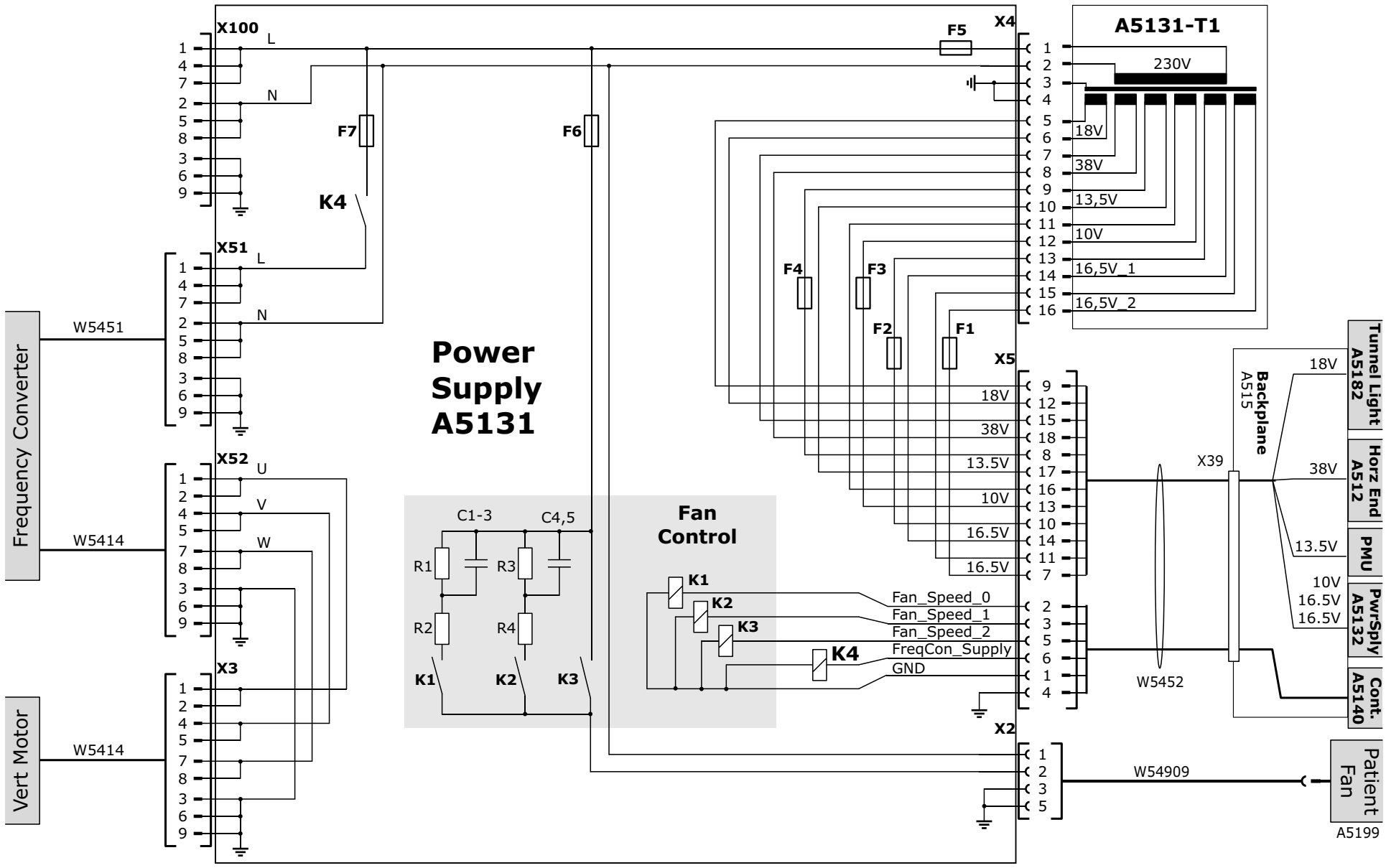

For internal use only. Copyright Siemens, 2010

Wiring Diagram

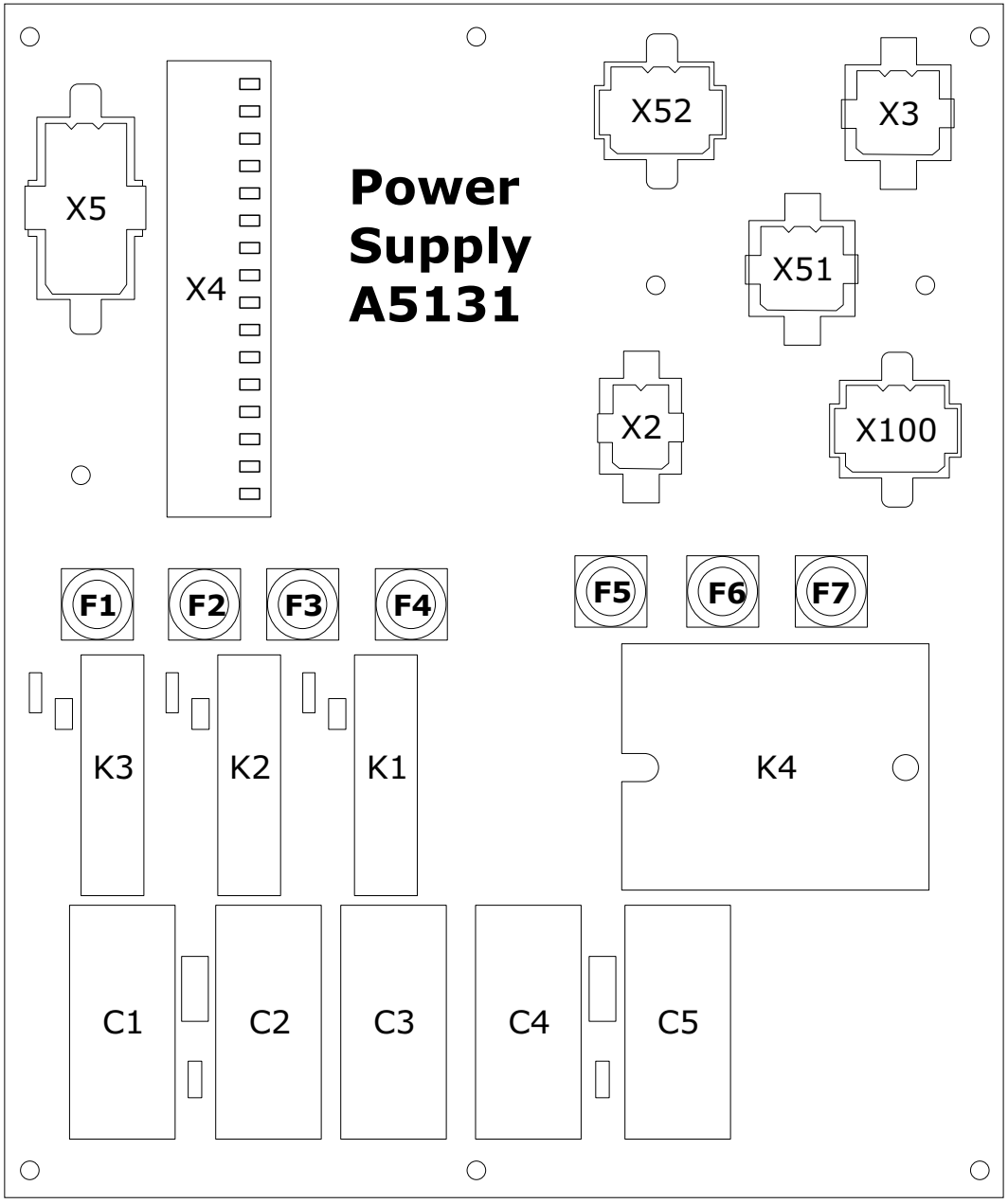

X100 Mains input
X2 Patient Fan
X3 Vertical Motor
X4 transformer secondary
X5 connection to PTAB
X51 Freq Converter
X52 Freq Converter

For internal use only. Copyright Siemens, 2010

PTAB Backplane
A5115

Block Diagram

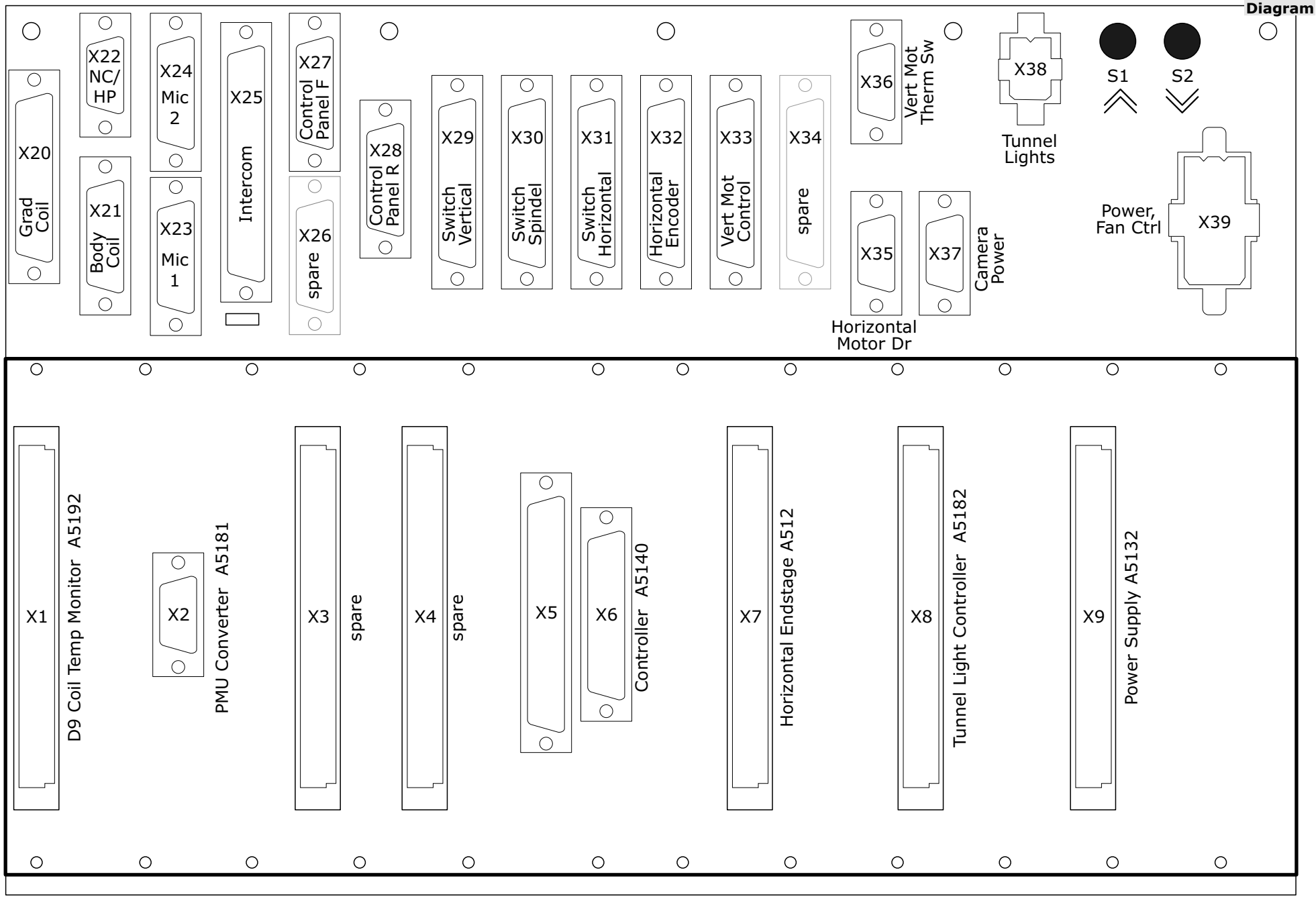

For internal use only. Copyright Siemens, 2010

Remote Monitor, Inroom Console Options

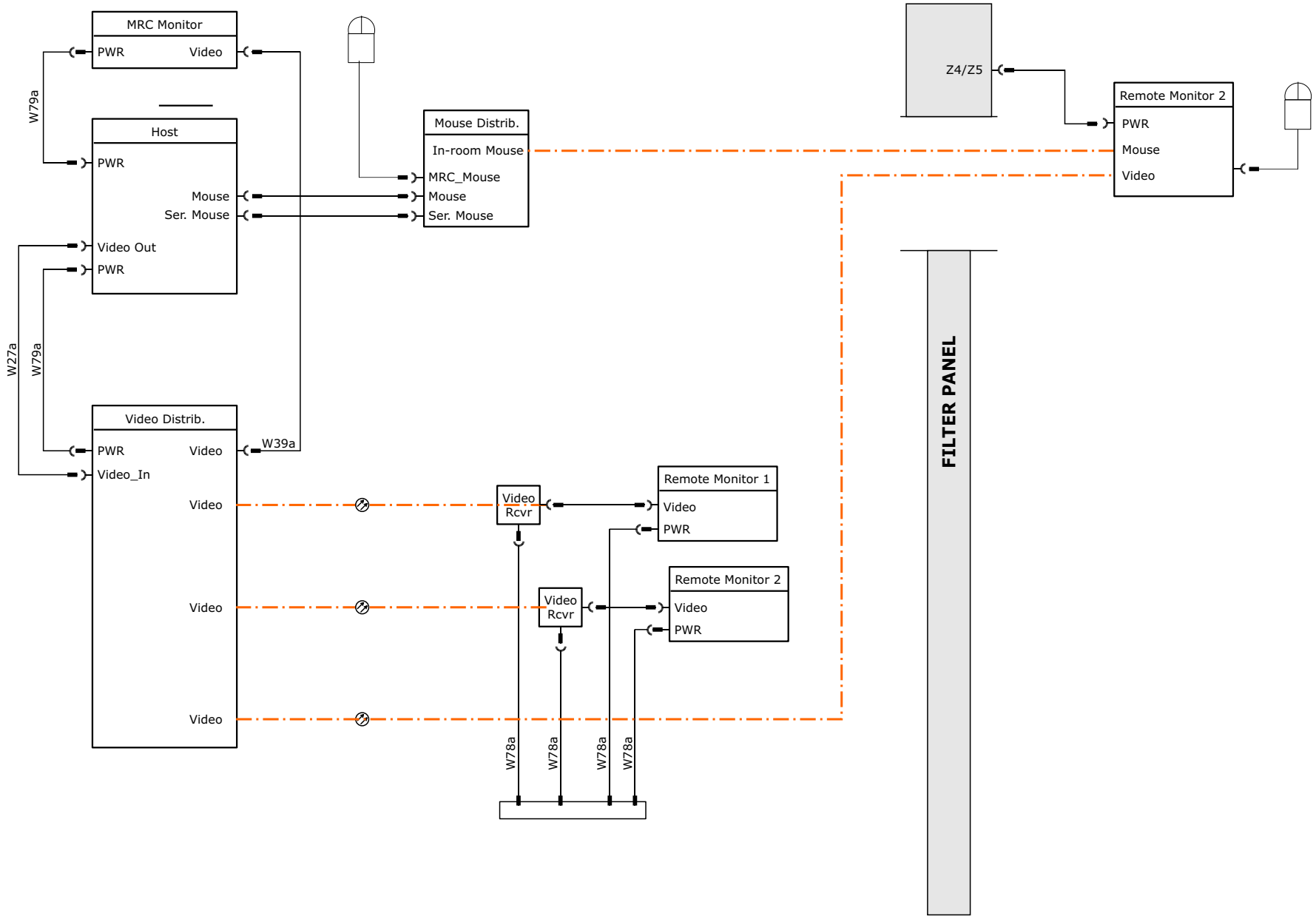

For internal use only. Copyright Siemens, 2010

<W008>

Micro Out
Intercom

Micro In
HOST Audio Port (pink)

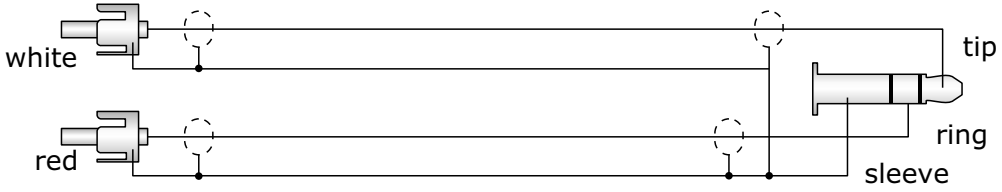

Cinch
(RCA)

3.5mm stereo plug

Length	Part Number	Notes
3m	75 46 125 K2201	

For internal use only. Copyright Siemens, 2010

<W009>

Speaker Out
HOST Sound Card (green)

CV in
Intercom

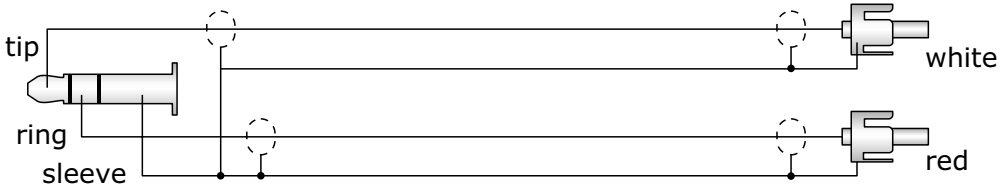

3.5mm stereo plug

Cinch
(RCA)

Length	Part Number	Notes
3m	75 46 133 K2201	

For internal use only. Copyright Siemens, 2010

<W010 - W017>

X50-X57 CCA roof			X01-X08 Filter panel
1,5m 47 59 689 K2201 5m 57 51 719 K2201 10m 47 66 023 K2201 13m 47 59 796 K2201	X50 N-type	W010 MRSIG_1	X01 N-type
1,5m 47 59 697 K2201 5m 57 51 727 K2201 10m 47 66 031 K2201 13m 47 59 804 K2201	X51 N-type	W011 MRSIG_2	X02 N-type
1,5m 47 60 893 K2201 5m 57 51 628 K2201 10m 47 66 262 K2201 13m 47 59 887 K2201	X52 N-type	W012 MRSIG_3	X03 N-type
1,5m 47 62 147 K2201 5m 57 51 636 K2201 10m 47 66 270 K2201 13m 47 60 885 K2201	X53 N-type	W013 MRSIG_4	X04 N-type
1,5m 57 52 832 K2201 10m 57 52 873 K2201 13m 57 52 295 K2201	X54 N-type	W014 MRSIG_5	X05 N-type
1,5m 57 52 840 K2201 10m 57 52 881 K2201 13m 57 52 303 K2201	X55 N-type	W015 MRSIG_6	X06 N-type
1,5m 57 52 857 K2201 10m 57 52 899 K2201 13m 57 52 311 K2201	X56 N-type	W016 MRSIG_7	X07 N-type
1,5m 57 52 865 K2201 10m 57 52 907 K2201 13m 57 52 329 K2201	X57 N-type	W017 MRSIG_8	X08 N-type

For internal use only. Copyright Siemens, 2010

<W018>

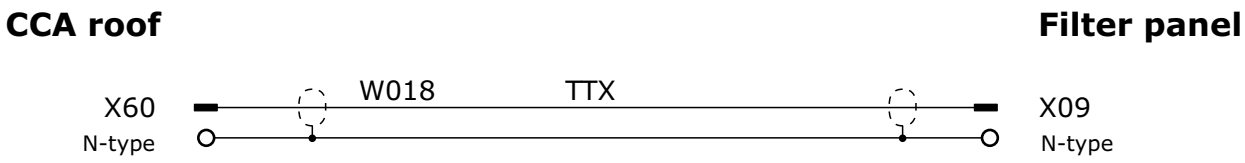

Length	Part Number	Notes
1.5m	47 59 705 K2201	
5m	57 51 735 K2201	
10m	47 66 049 K2201	
13m	47 60 687 K2201	

For internal use only. Copyright Siemens, 2010

<W019>

CCA roof **TAS**

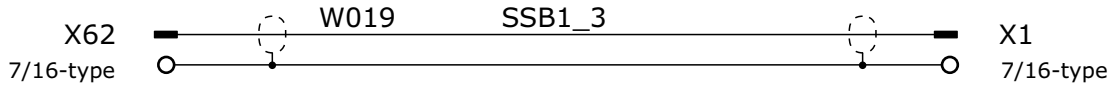

Length	Part Number	Notes
1.5m	47 59 713 K2201	RG214 cable
5m	57 51 743 K2201	
10m	47 66 056 K2201	LCF 7/8” cable
13m	47 60 695 K2201	LCF 7/8”

For internal use only. Copyright Siemens, 2010

<W020>

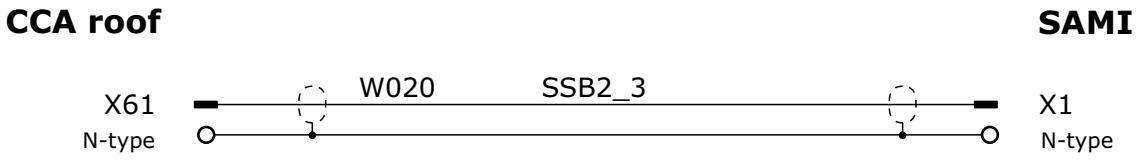

Length	Part Number	Notes
1,5m	71 21 689 K2201	
5m	75 44 630 K2201	
10m	75 44 484 K2201	
13m	75 44 450 K2201	

For internal use only. Copyright Siemens, 2010

<W021>

CCA roof **SAMI**

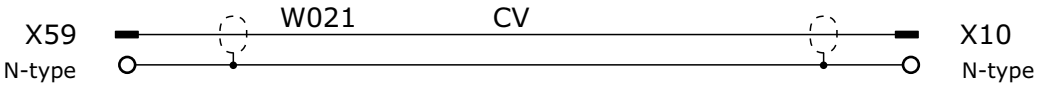

Length	Part Number	Notes
1,5m	47 59 721 K2201	
5m	57 51 750 K2201	
10m	47 66 064 K2201	
13m	47 60 703 K2201	

For internal use only. Copyright Siemens, 2010

<W026a>

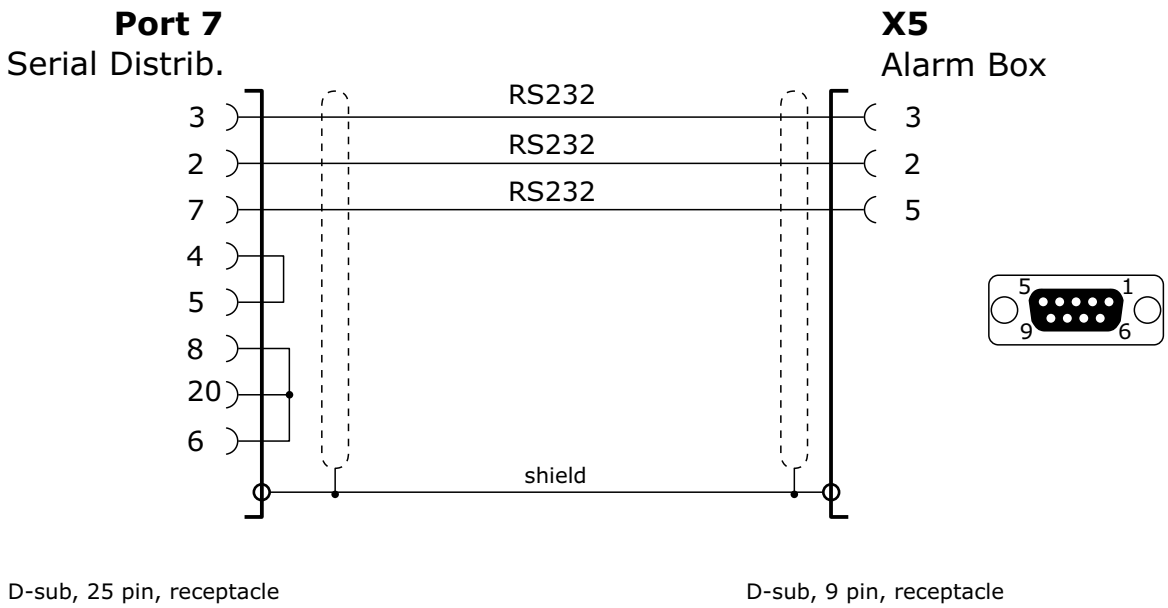

Length	Part Number	Notes
15m	57 53 350 K2200	

For internal use only. Copyright Siemens, 2010

<W027a>

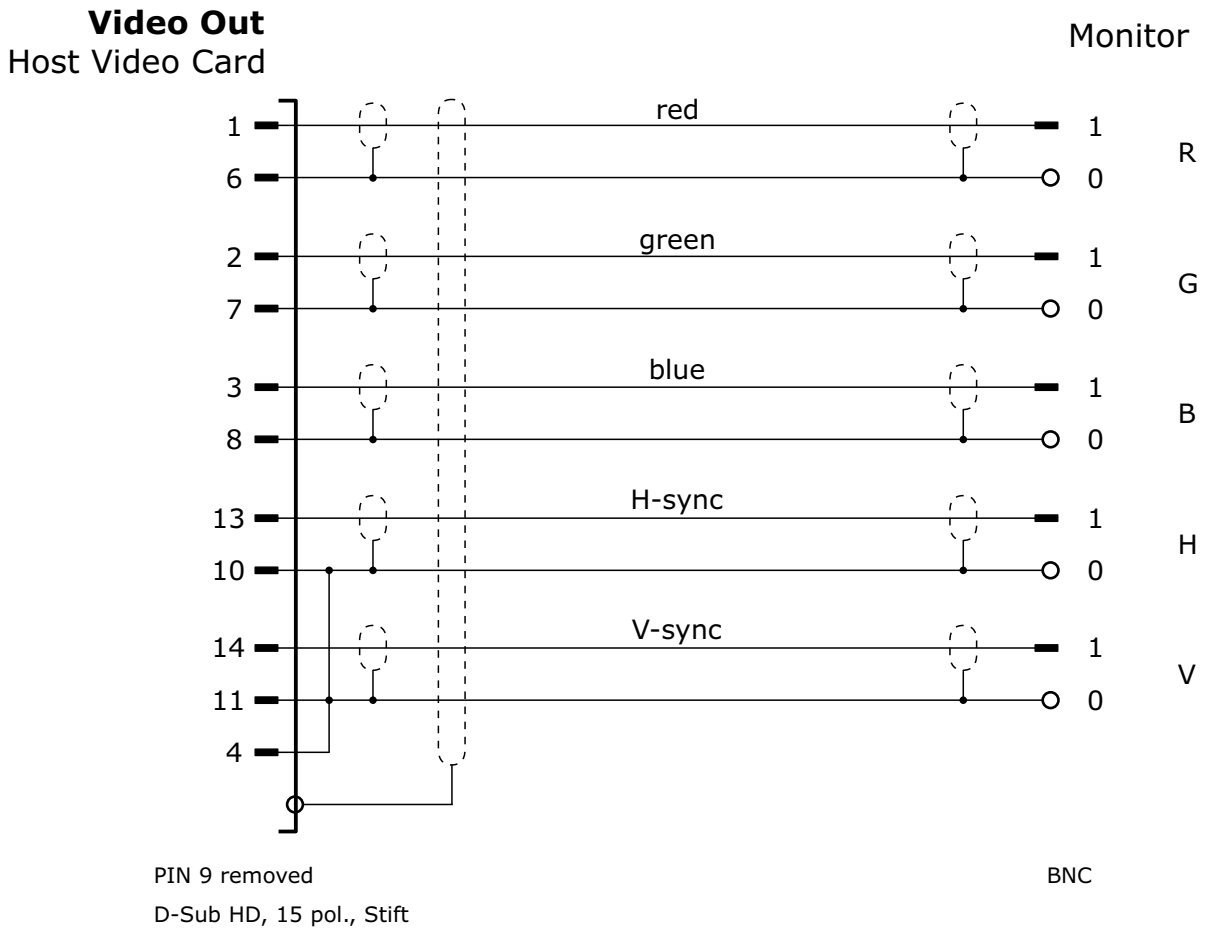

Length	Part Number	Notes
3m	57 53 343 K2220	5-conductor 75 Ohm coax cable

(AEM-Nr.: 105 755 REV:01)

For internal use only. Copyright Siemens, 2010

<W029a>

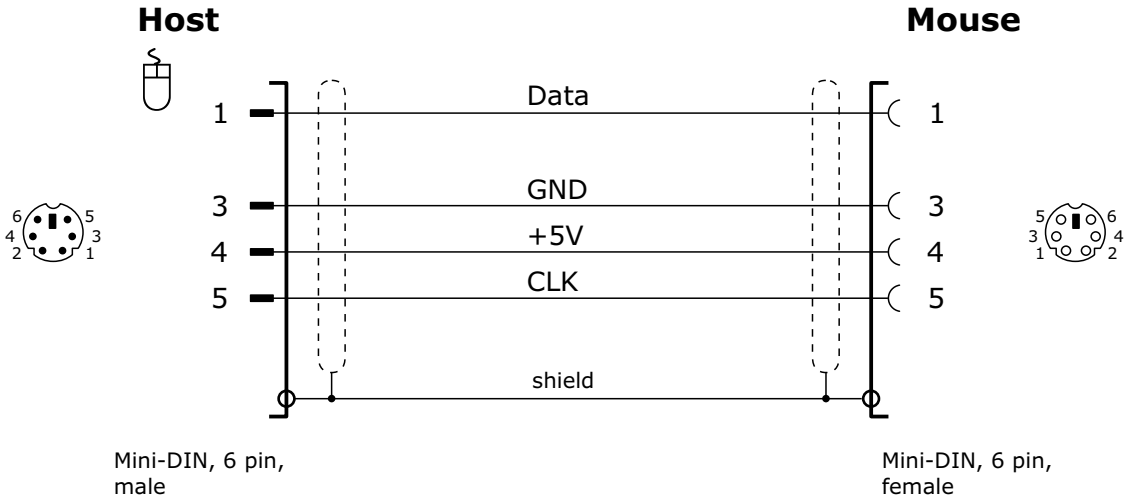

Length	Part Number	Notes
4m	57 53 327 K2220	

For internal use only. Copyright Siemens, 2010

<W030>

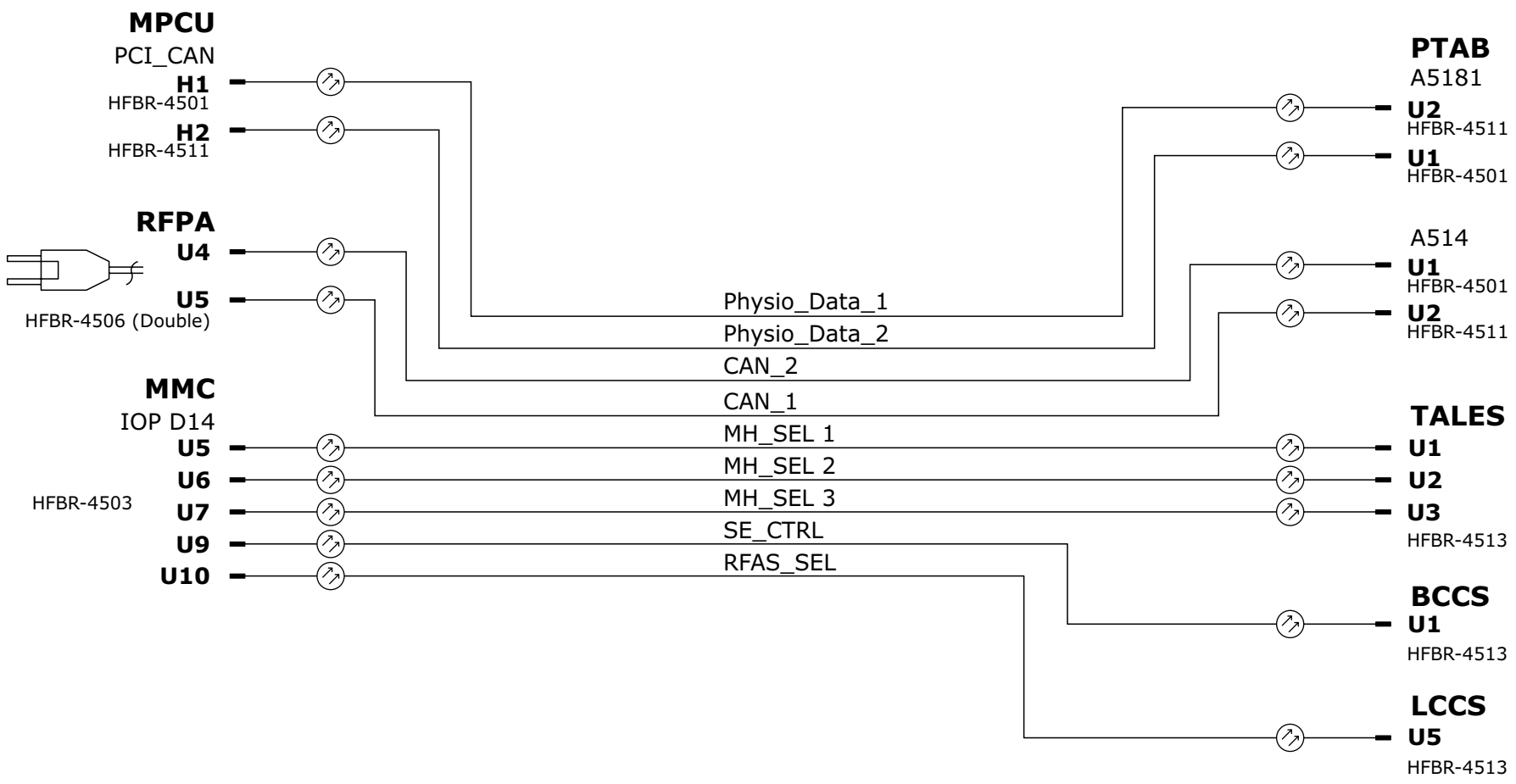

Length	Part Number	Notes
12m	47 60 711 K2201	
15m	47 66 221 K2201	
22m	47 60 745 K2201	

For internal use only. Copyright Siemens, 2010

<W031>

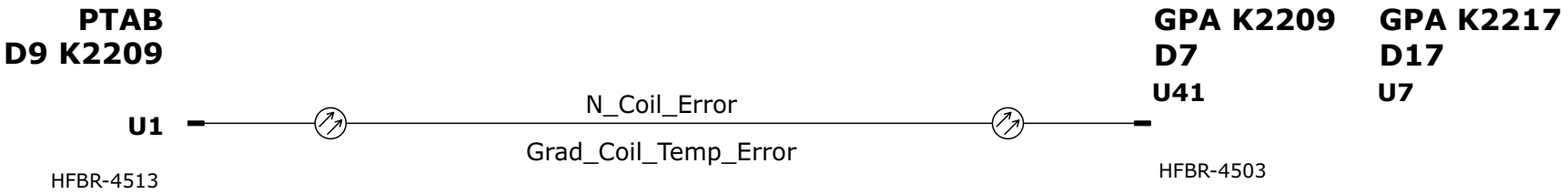

Length	Part Number	Notes
12m	47 60 729 K2201	
15m	47 66 239 K2201	
22m	47 60 752 K2201	

For internal use only. Copyright Siemens, 2010

<W032>

MSUP
D1 K2206

RCA K2206
Cooler Electronics

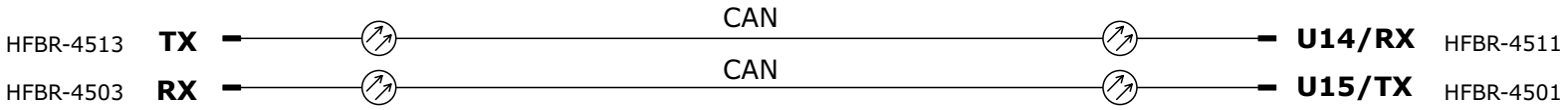

Length	Part Number	Notes
15m	47 60 737 K2201	

For internal use only. Copyright Siemens, 2010

<W033a>

MMC RX4

U1

ST plug

Raw Data

Imager Slot 7 (D35 K5004)

U1

ST plug

Length	Part Number	Notes
25m	57 53 319 K2200	

<W033b>

MMC RX4

U1

ST plug

Raw Data

Imager Slot 1 (D35 K5004)

U1

ST plug

Length	Part Number	Notes
25m	71 22 794 K2200	

For internal use only. Copyright Siemens, 2010

<W040>

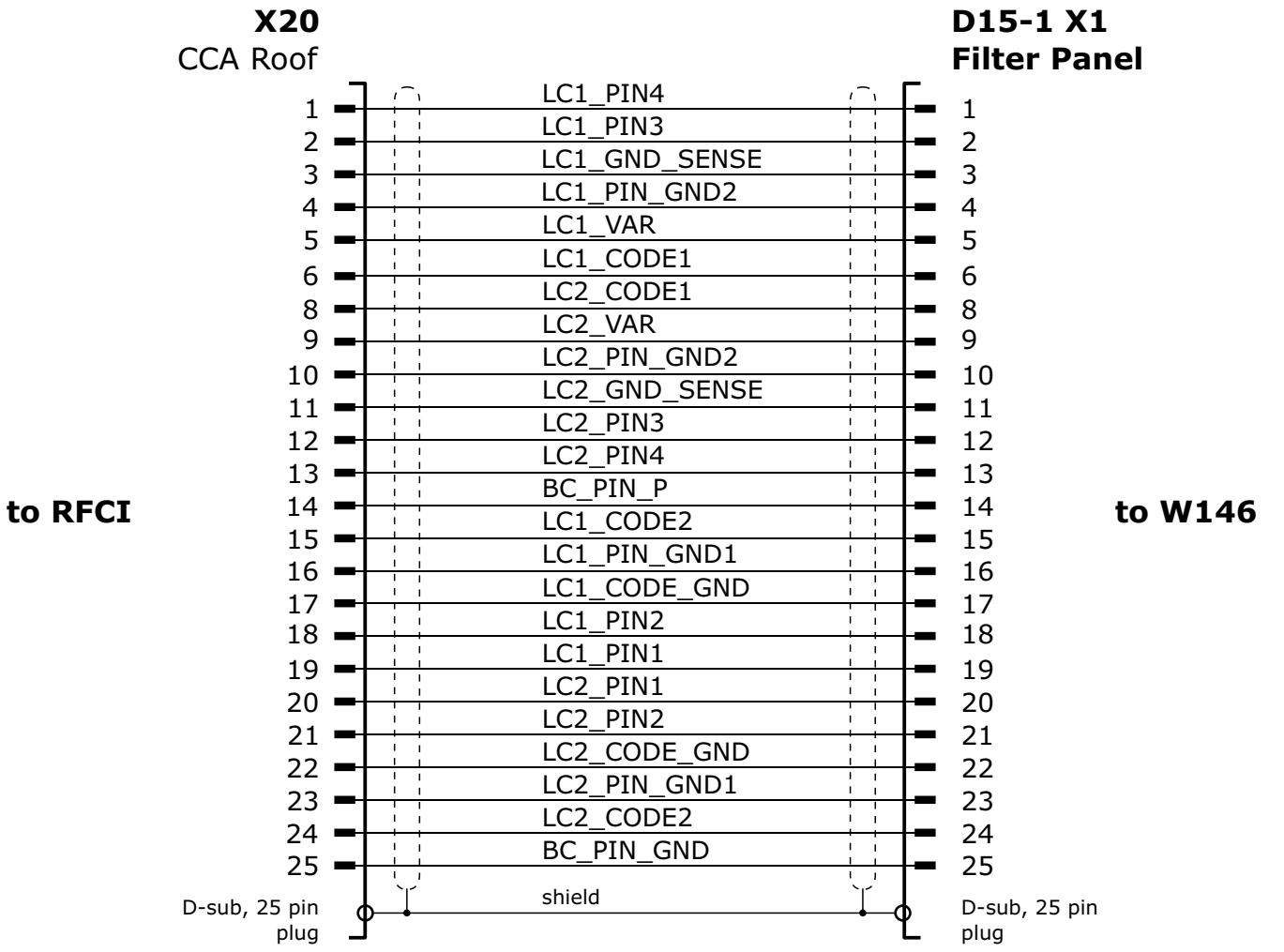

Length	Part Number	Notes
1.5m	47 60 760 K2201	
5m	71 22 091 K2227	
10m	47 66 122 K2201	
13m	47 60 810 K2201	

For internal use only. Copyright Siemens, 2010

<W041>

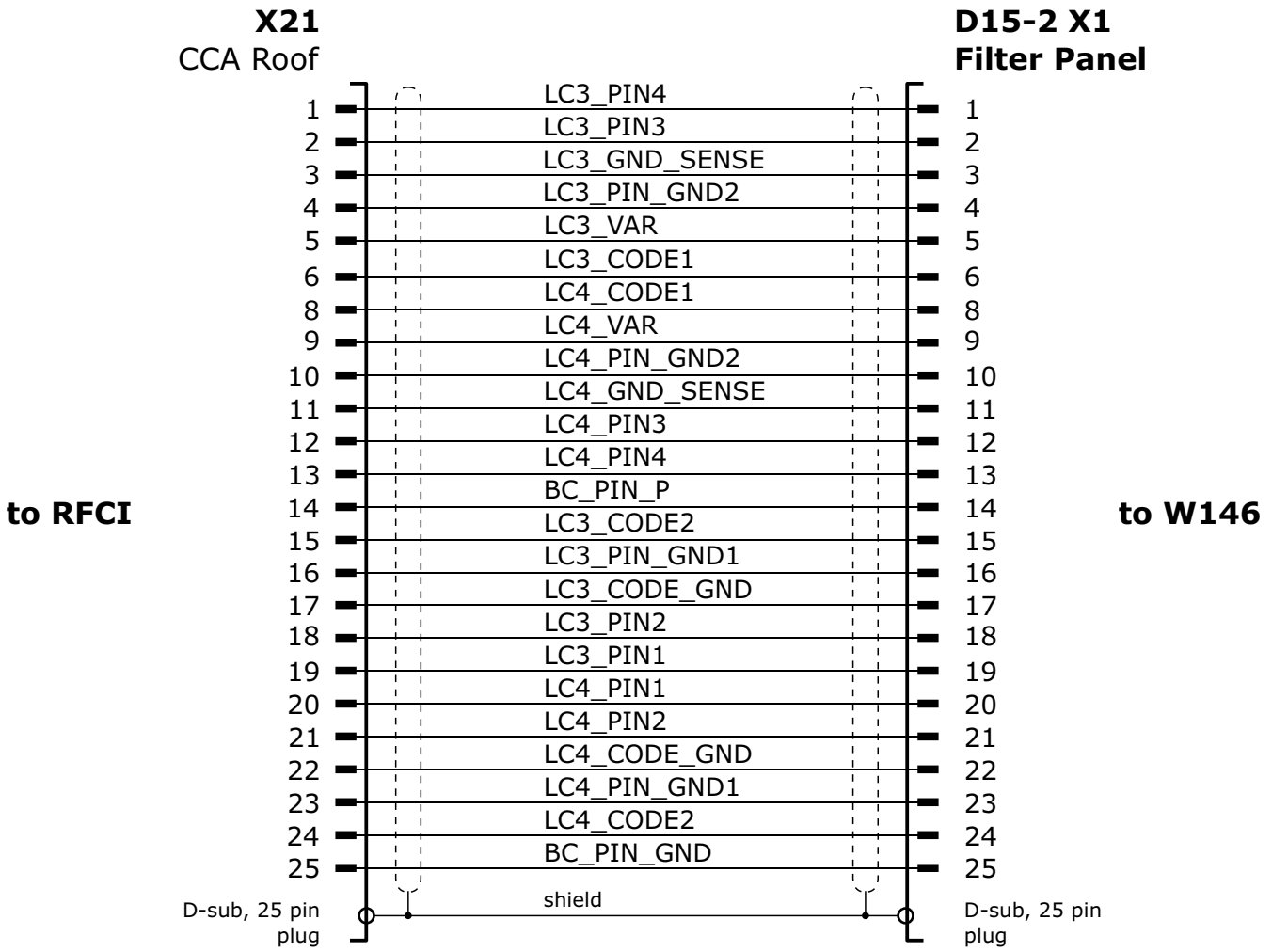

Length	Part Number	Notes
1.5m	47 60 778 K2201	
5m	57 51 826 K2201	
10m	47 66 130 K2201	
13m	47 62 063 K2201	

For internal use only. Copyright Siemens, 2010

<W042>

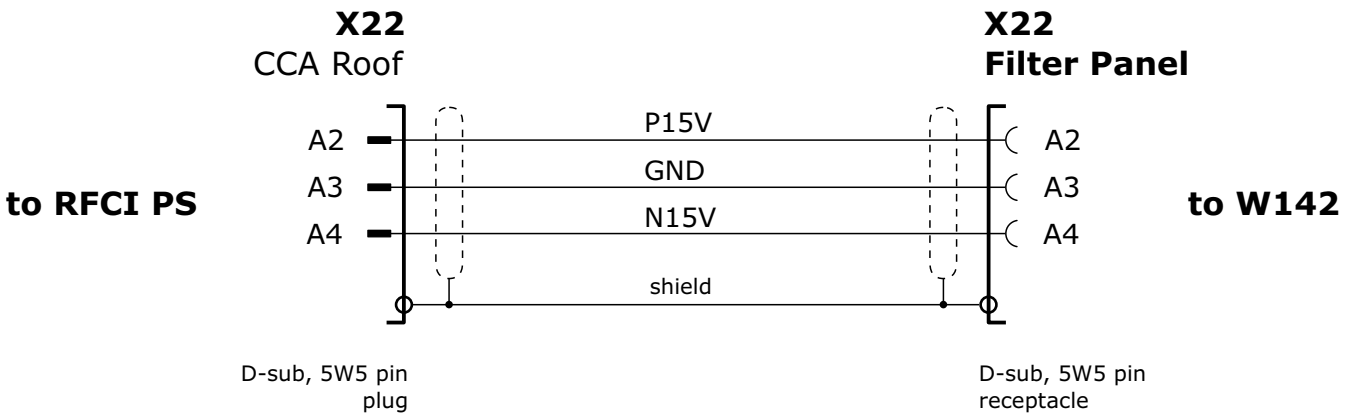

Length	Part Number	Notes
1.5m	47 60 786 K2201	
5m	57 51 834 K2201	
10m	47 66 148 K2201	
13m	47 59 820 K2201	

For internal use only. Copyright Siemens, 2010

<W044a>

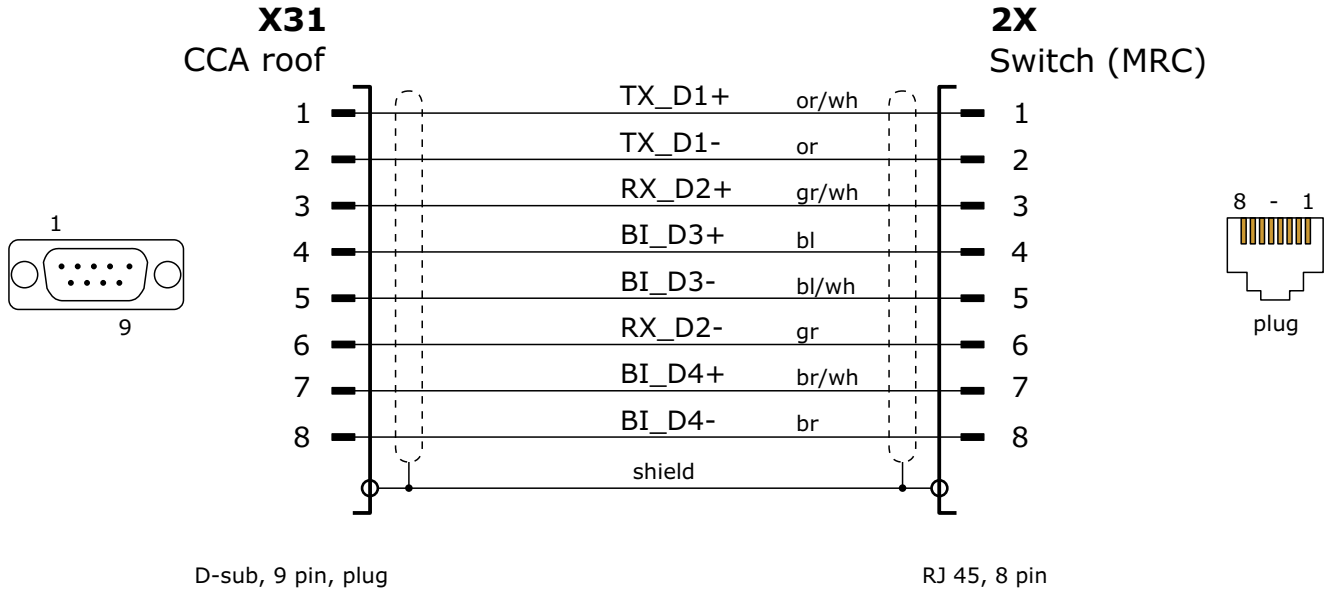

Length	Part Number	Notes
23m	57 53 301 K2200	ETHERNET Class 5 + performance type

For internal use only. Copyright Siemens, 2010

<W047>

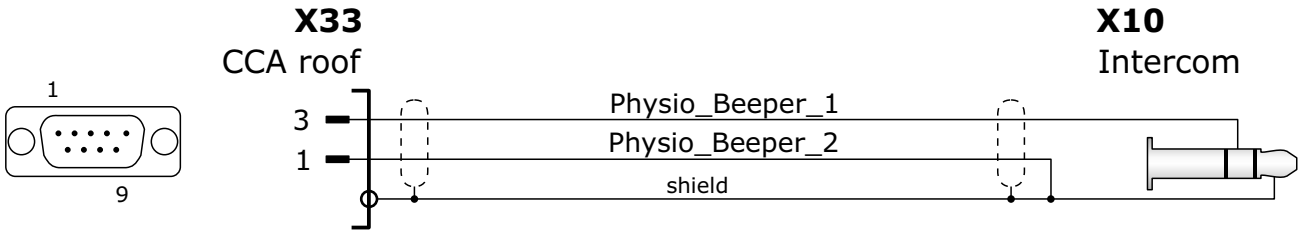

D-sub, 9 pin, plug

Stereo-connector; 2.5mm
Socket for stereo connector:
ground (front)
signal (center)
housing (not connected)

Length	Part Number	Notes
23m	47 55 133 K2203	

For internal use only. Copyright Siemens, 2010

<W048a>

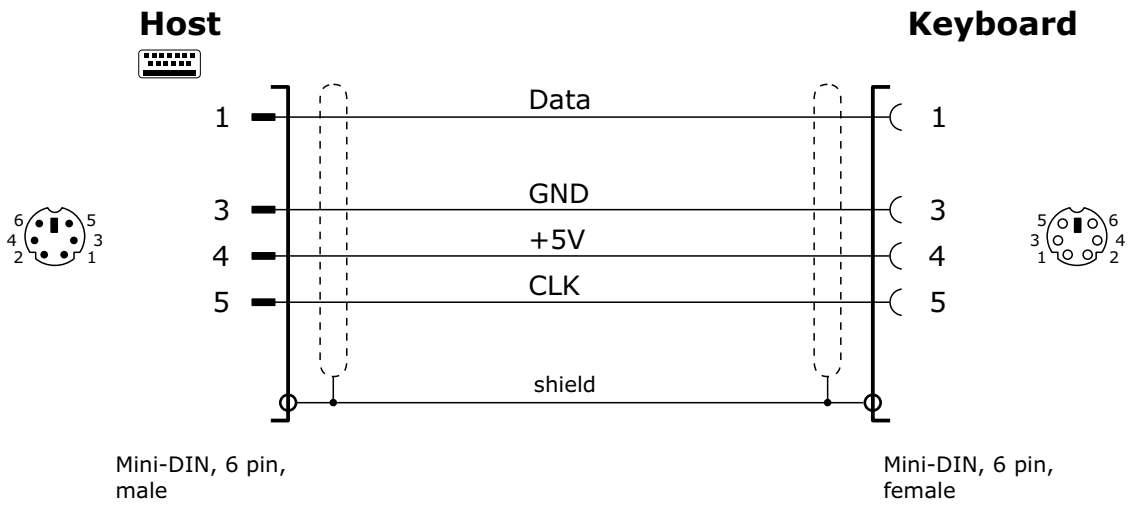

Length	Part Number	Notes
4m	57 53 293 K2220	

For internal use only. Copyright Siemens, 2010

<W057>

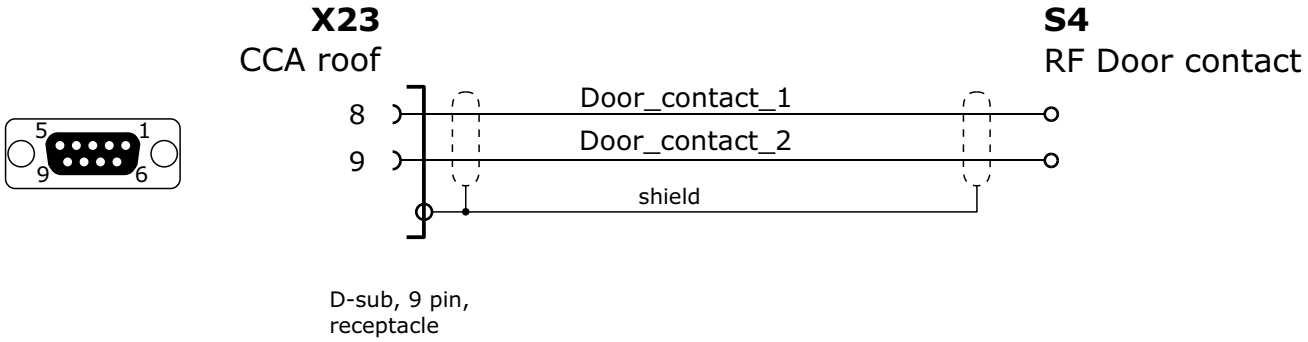

Length	Part Number	Notes
20m	47 62 030 K2201	

For internal use only. Copyright Siemens, 2010

<W058>

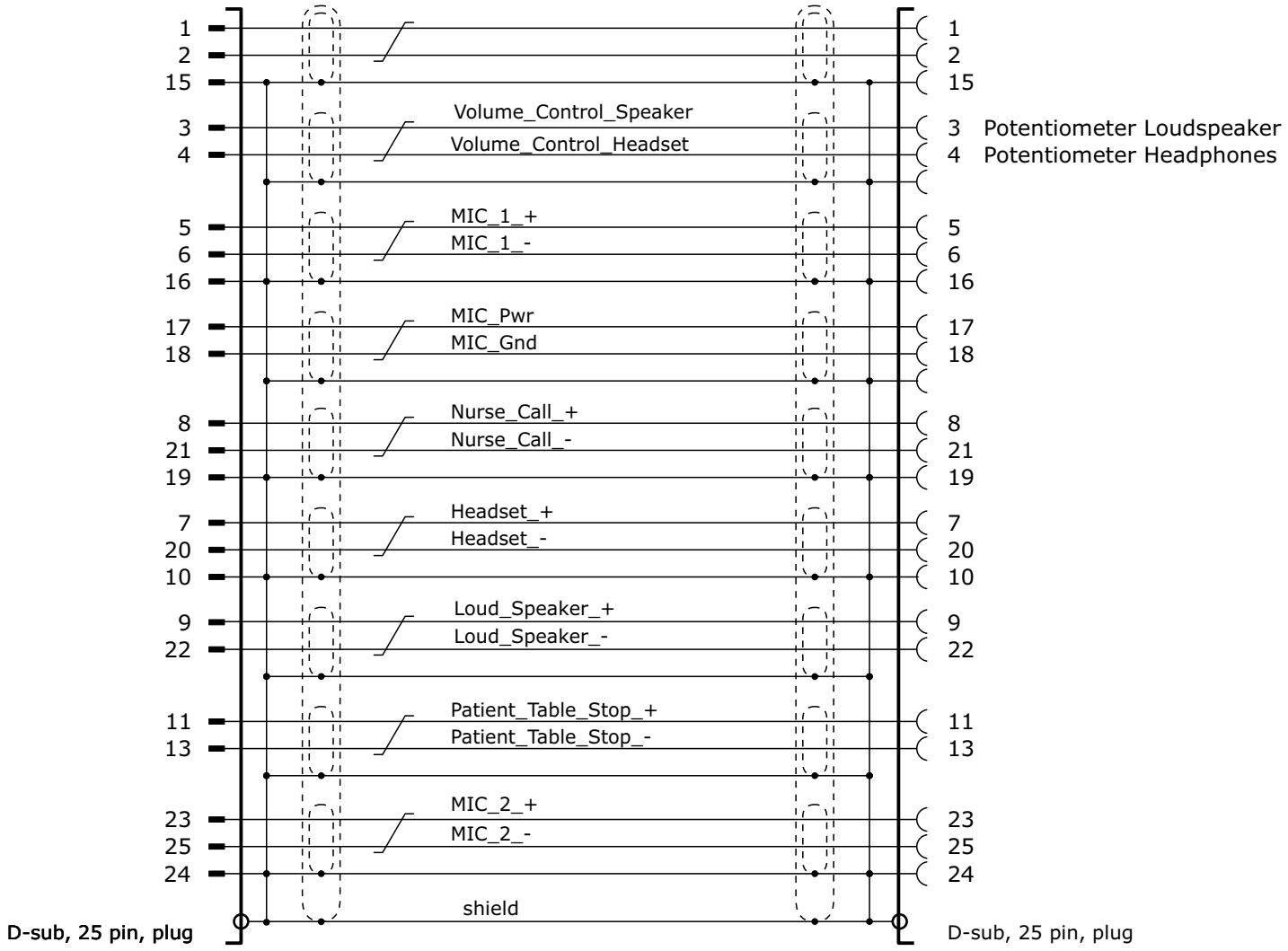

Length	Part Number	Notes
25m	47 62 048 K2201	

For internal use only. Copyright Siemens, 2010

<W061>

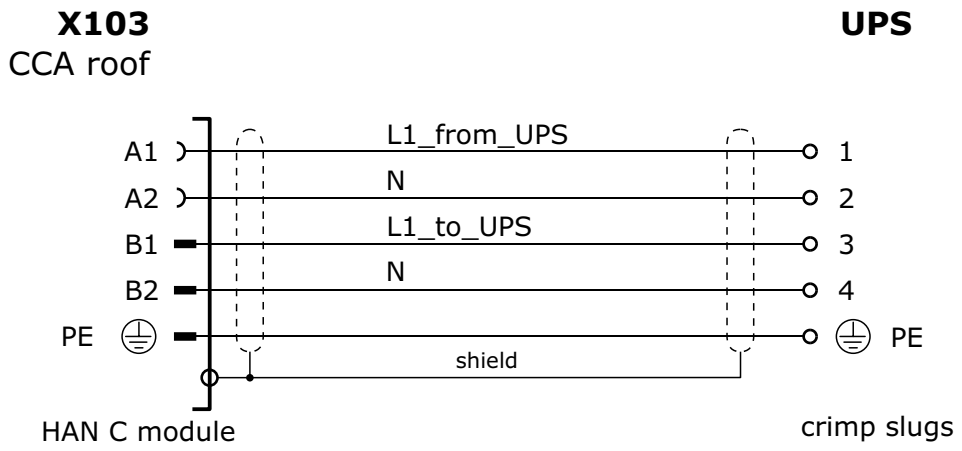

Length	Part Number	Notes
9m	57 50 273 K2220	

For internal use only. Copyright Siemens, 2010

<W062>

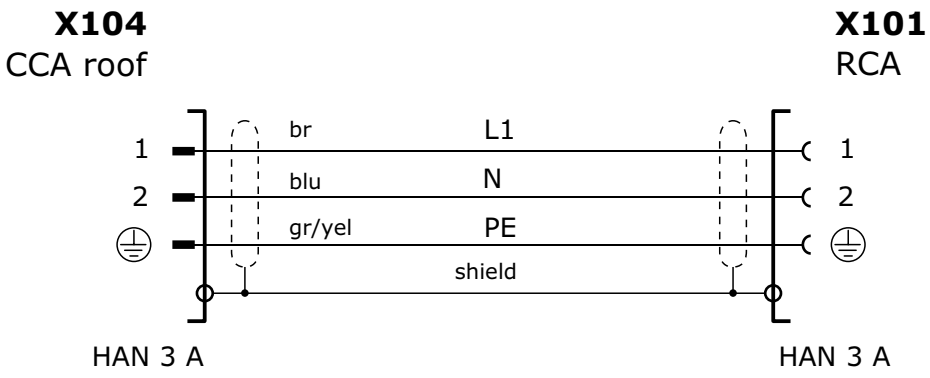

Length	Part Number	Notes
15m	47 59 564 K2200	

For internal use only. Copyright Siemens, 2010

<W063>

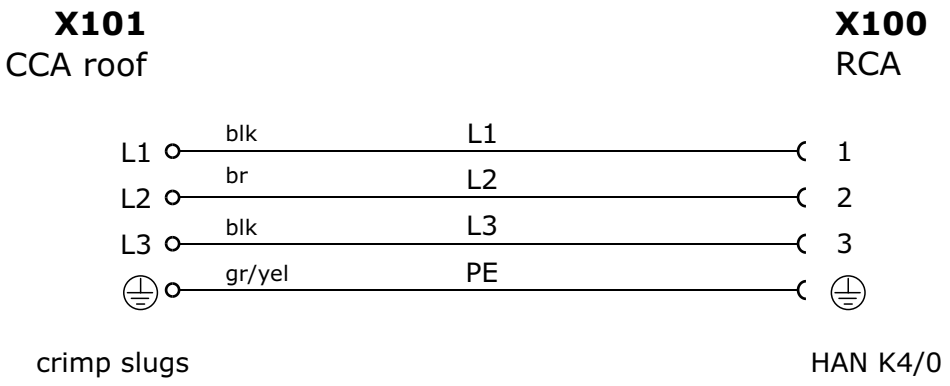

Length	Part Number	Notes
15m	47 59 572 K2200	

For internal use only. Copyright Siemens, 2010

<W064>

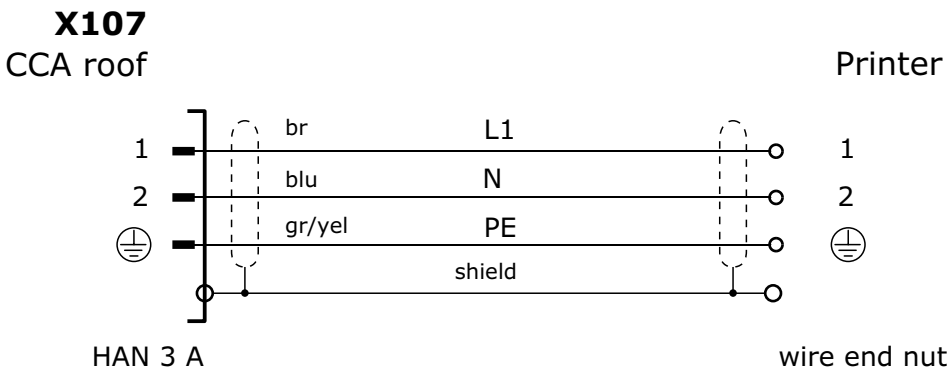

Length	Part Number	Notes
23m	47 62 881 K2203	

For internal use only. Copyright Siemens, 2010

<W065>

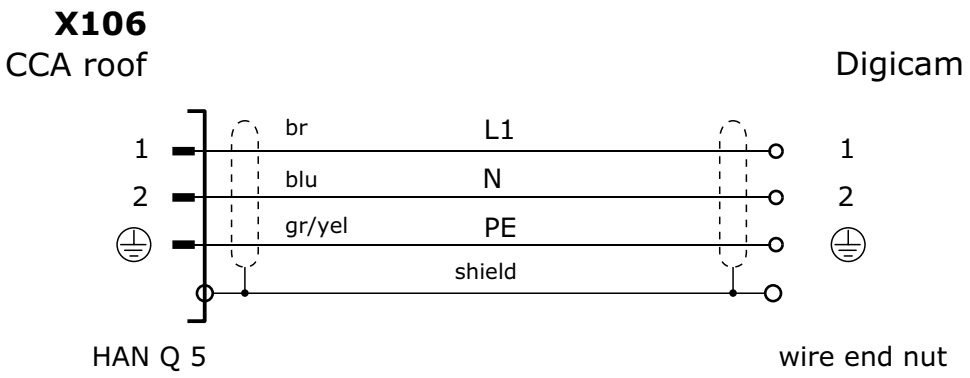

Length	Part Number	Notes
23m	47 64 077 K2201	

For internal use only. Copyright Siemens, 2010

<W066a>

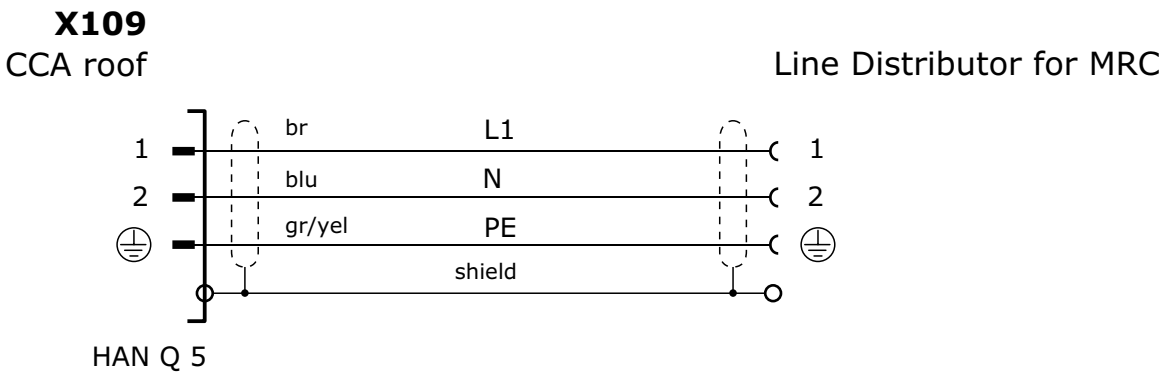

Length	Part Number	Notes
23m	57 53 277 K2200	

For internal use only. Copyright Siemens, 2010

<W068>

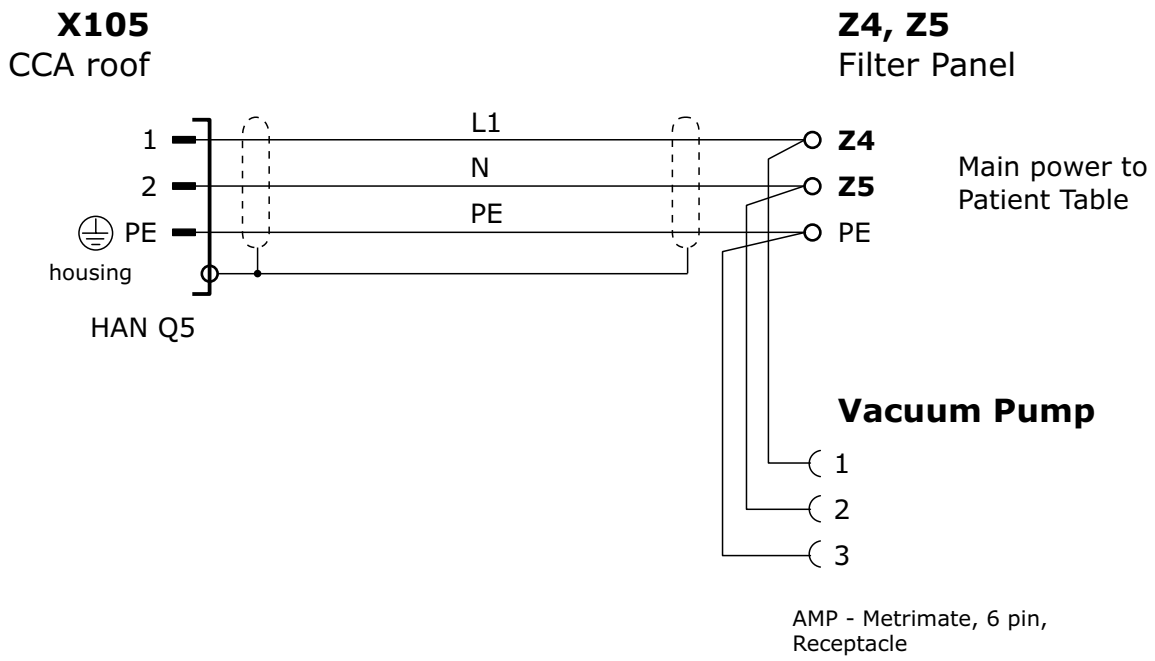

Length	Part Number	Notes
2m	47 59 598 K2200	
13m	47 59 606 K2200	

For internal use only. Copyright Siemens, 2010

<W069>

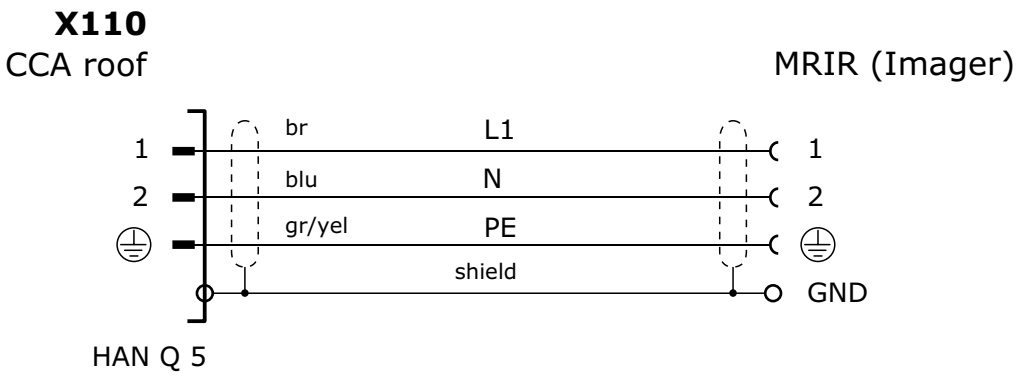

Length	Part Number	Notes
23m	57 53 269 K2200	

For internal use only. Copyright Siemens, 2010

<W072a>

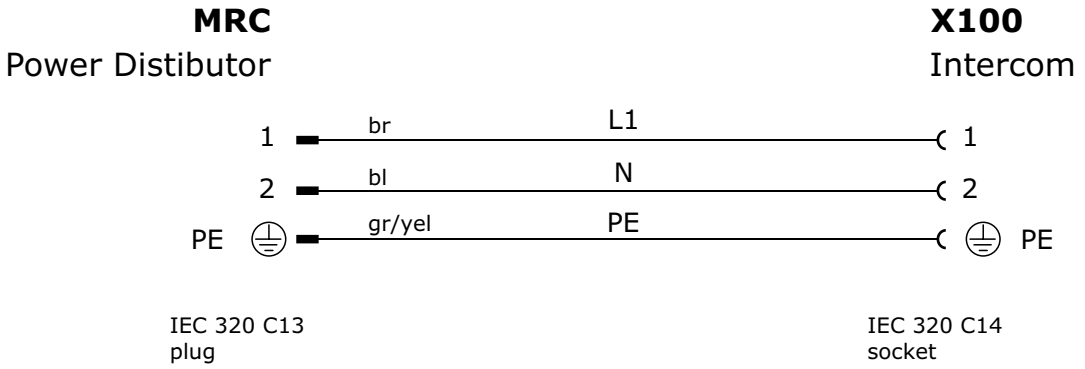

Length	Part Number	Notes
1.5m	71 21 002 K2200	

For internal use only. Copyright Siemens, 2010

<W076a>

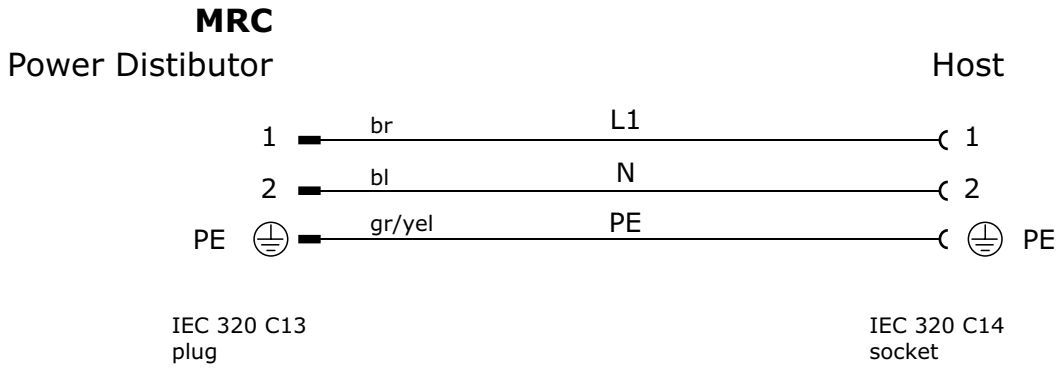

Length	Part Number	Notes
3m	57 53 244 K2200	

For internal use only. Copyright Siemens, 2010

<W077a>

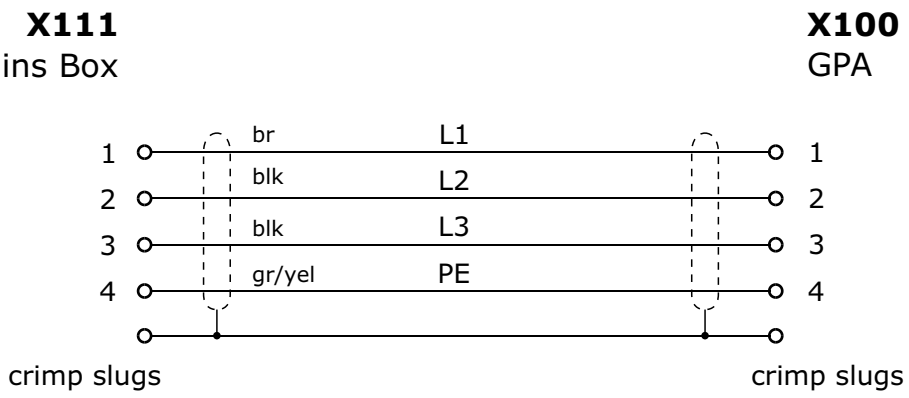

Length	Part Number	Notes
2m	57 53 426 K2200	

For internal use only. Copyright Siemens, 2010

<W110 - W117>

7m	47 59 739	K2201
10m	47 66 072	K2201
15m	57 51 768	K2201
7m	47 59 747	K2201
10m	47 66 080	K2201
15m	57 51 776	K2201
7m	47 62 139	K2201
10m	47 66 288	K2201
15m	57 51 628	K2201
7m	47 59 895	K2201
10m	47 66 296	K2201
15m	57 51 636	K2201

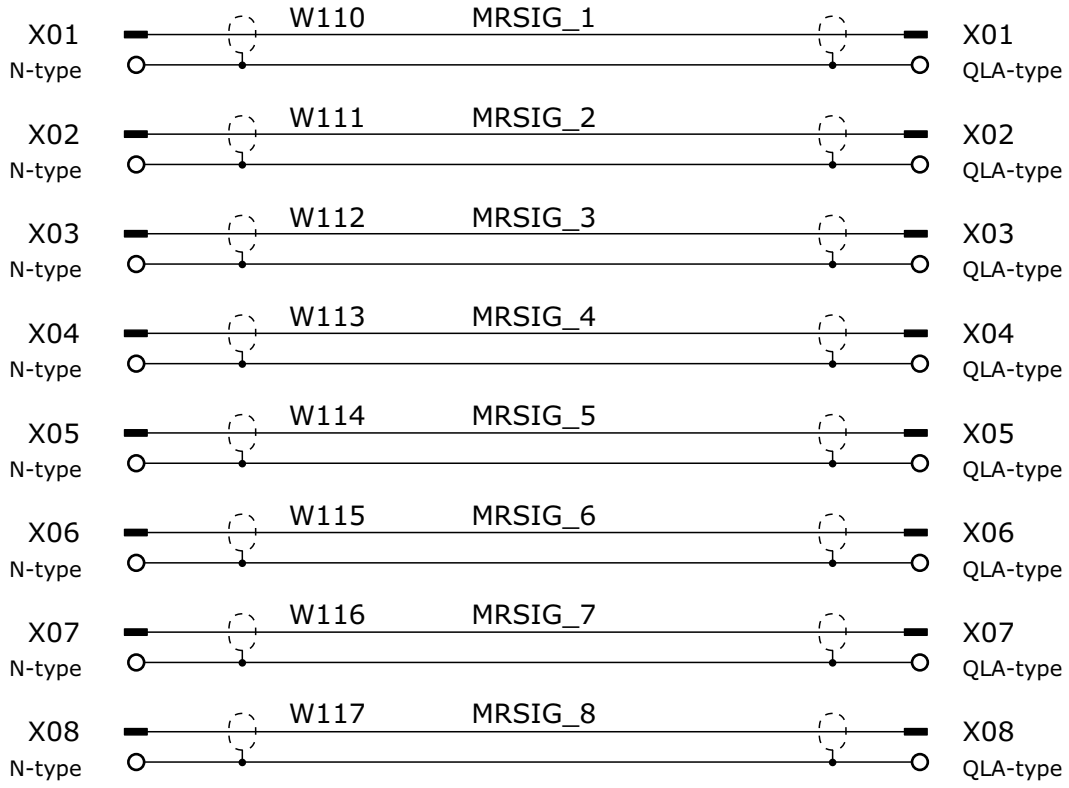

For internal use only. Copyright Siemens, 2010

<W118>

Filter Panel **LCCS**

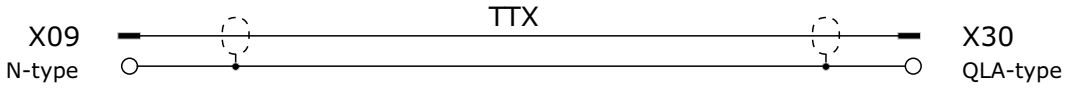

Length	Part Number	Notes
7m	47 59 754 K2201	
10m	47 66 098 K2201	
15m	57 51 784 K2201	

For internal use only. Copyright Siemens, 2010

<W119>

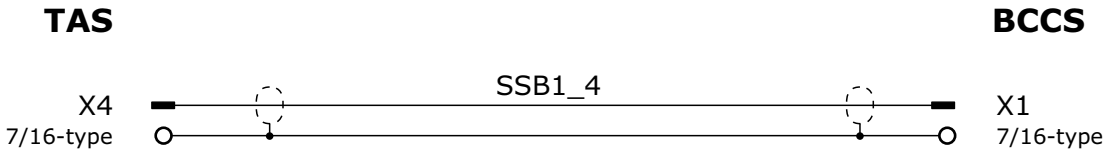

Length	Part Number	Notes
7m	47 59 762 K2201	
10m	47 66 106 K2201	
15m	57 51 792 K2201	

For internal use only. Copyright Siemens, 2010

<W120>

X5
Filter Panel
TAS

N-type

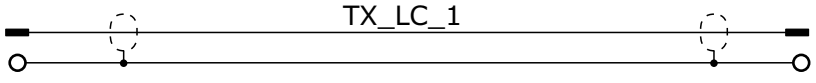

X5
TALES

N-type

Length	Part Number	Notes
7m	47 62 410 K2201	
10m	47 66 213 K2201	
15m	57 51 867 K2201	

For internal use only. Copyright Siemens, 2010

<W121>

X10
Filter Panel

X7
TALES

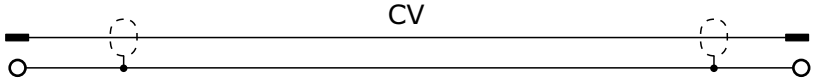

N-type

QLA-type

Length	Part Number	Notes
7m	47 59 770 K2201	
10m	47 66 114 K2201	
15m	57 51 800 K2201	

For internal use only. Copyright Siemens, 2010

<W123>

X7
BCCS

X6
TAS_3T / Filter Panel

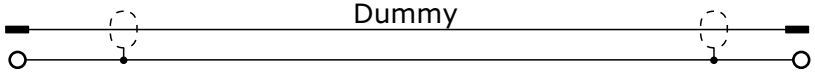

N pin, straight

N pin, straight

Length	Part Number	Notes
7m	47 59 788 K2201	replaced by 47 66 247 (below)
10m	47 66 247 K2201	
15m		

For internal use only. Copyright Siemens, 2010

<W124>

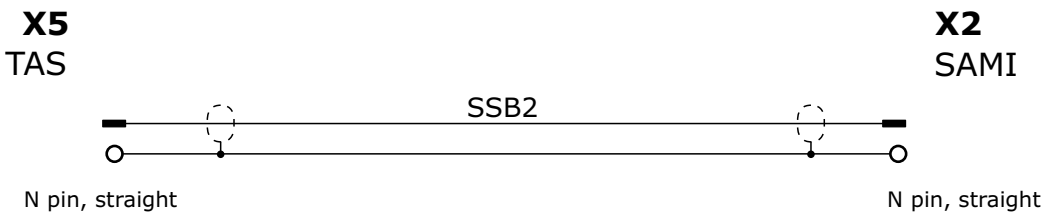

Length	Part Number	Notes
0.5m	71 21 697 K2201	

For internal use only. Copyright Siemens, 2010

<W125>

X3
SAMI

X5
TALES

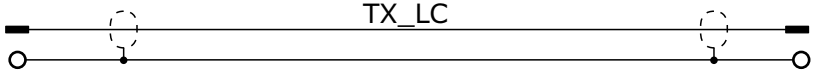

7/16, straight with
adapter to N-pin

N pin, straight

Length	Part Number	Notes
7m	75 44 476 K2201	RG214
15m	71 22 349 K2201	RG214
22m	75 45 648 K2201	RG214

For internal use only. Copyright Siemens, 2010

SIEMENS AG Healthcare Sector	Cable W140			
	Project 024/047	Print No. M1-010.844.01.06	Date 06.2011	Page 86

<W140>

D15-4 / X2
Filter Panel

X25
Patient Table

W058

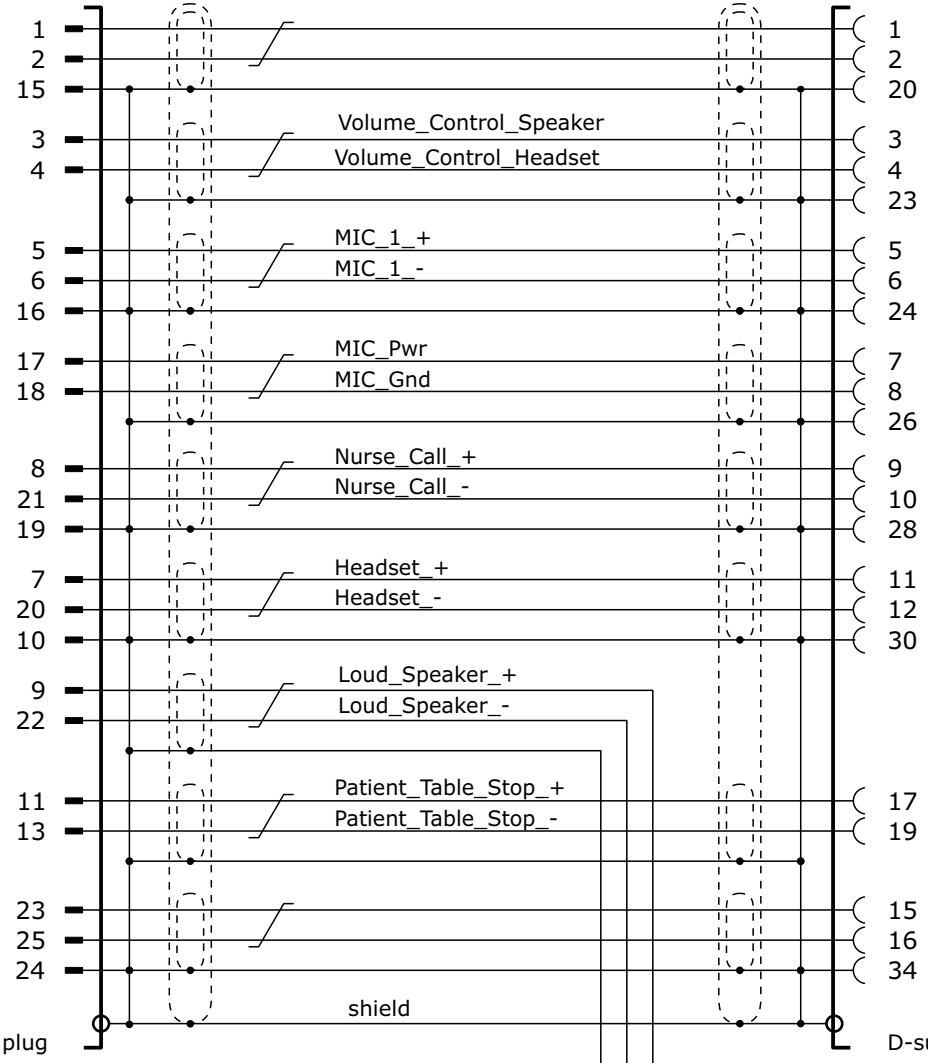

Length	Part Number	Notes
7m	47 60 802 K2201	
10m	47 66 155 K2201	
15m		

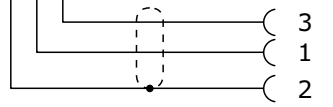

X1
Speaker

For internal use only. Copyright Siemens, 2010

<W142>

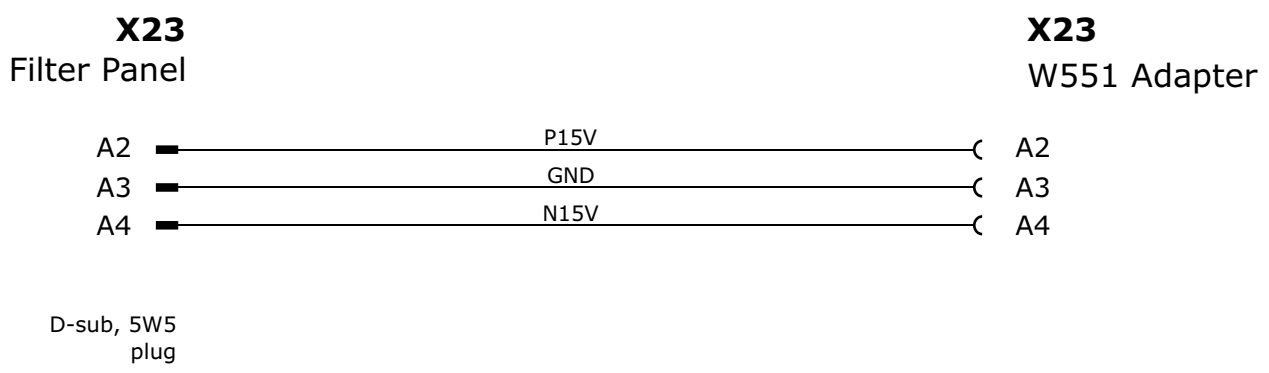

Length	Part Number	Notes
7m	47 62 055 K2204	
10m	47 66 163 K2204	
15m	57 51 842 K2201	

For internal use only. Copyright Siemens, 2010

<W143>

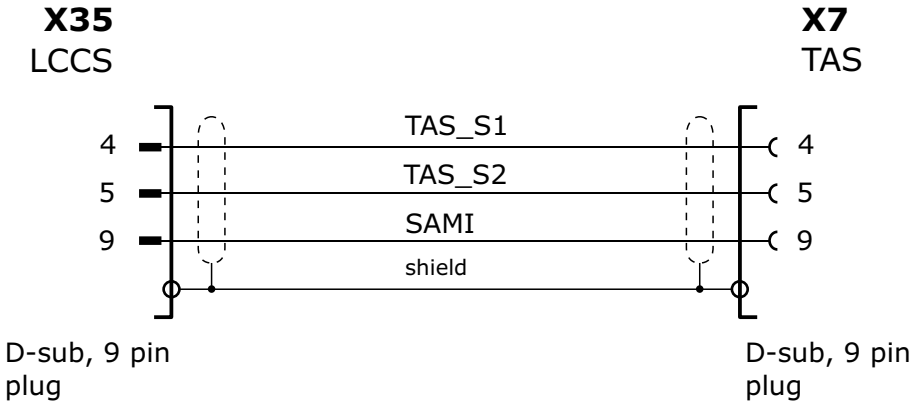

Length	Part Number	Notes
7m	47 61 529 K2204	
10m	47 66 189 K2204	
15m	57 51 875 K2201	

For internal use only. Copyright Siemens, 2010

<W145>

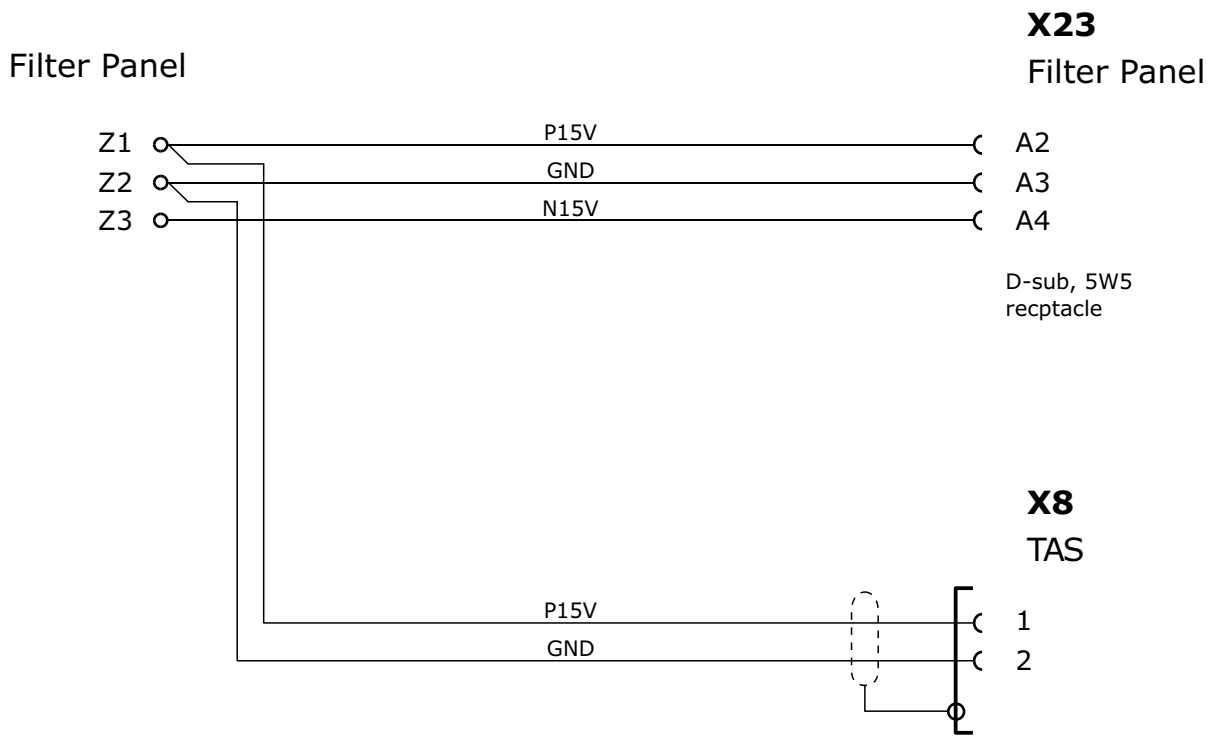

Length	Part Number	Notes
	47 55 463 K2204	

For internal use only. Copyright Siemens, 2010

SIEMENS AG Healthcare Sector	Cable W146			
	Project 024/047	Print No. M1-010.844.01.06	Date 06.2011	Page 90

<W146>

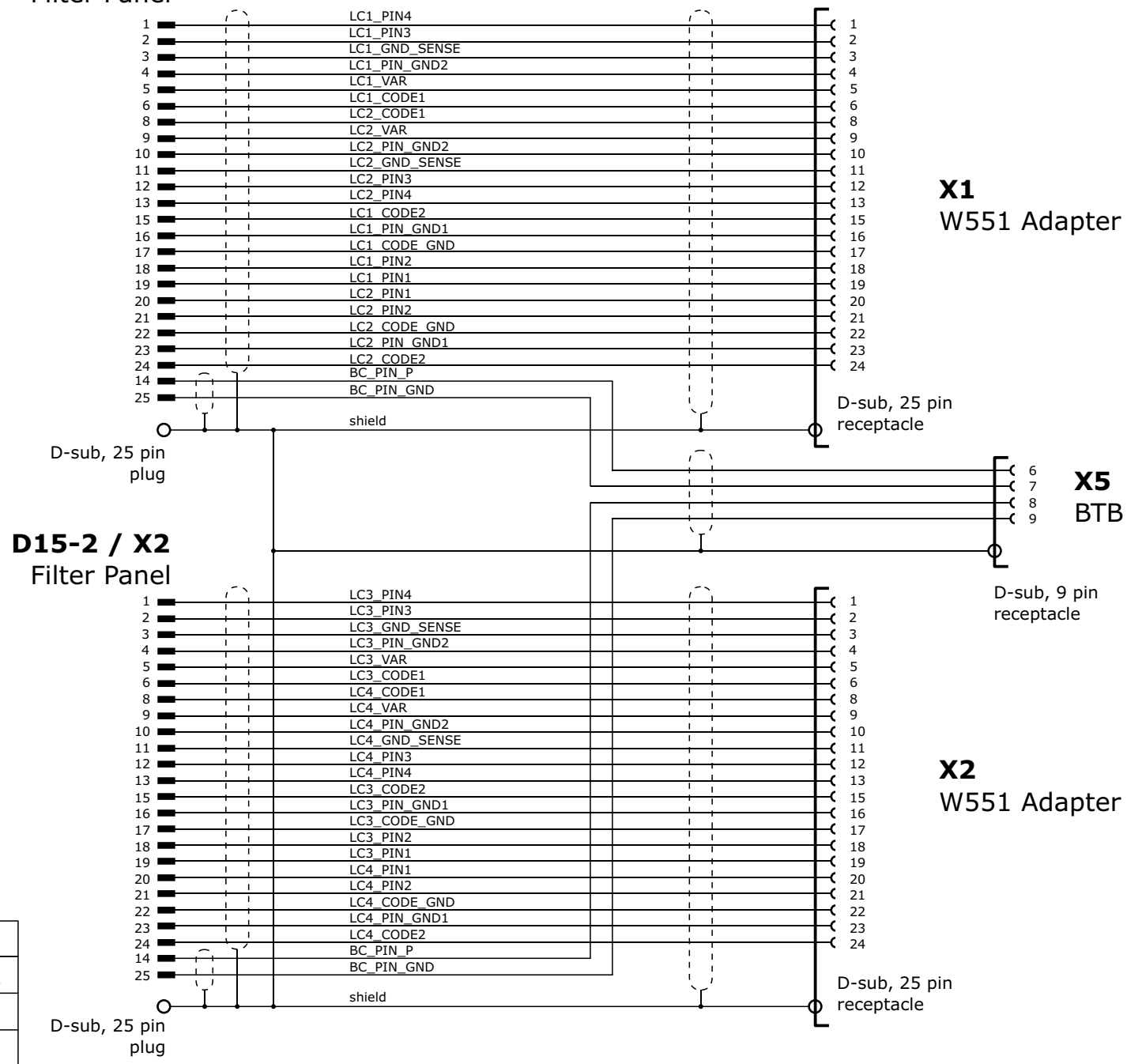

Length	Part Number
7m	47 59 812 K2201
10m	47 66 171 K2201
15m	57 51 859 K2201

For internal use only. Copyright Siemens, 2010

<W149>

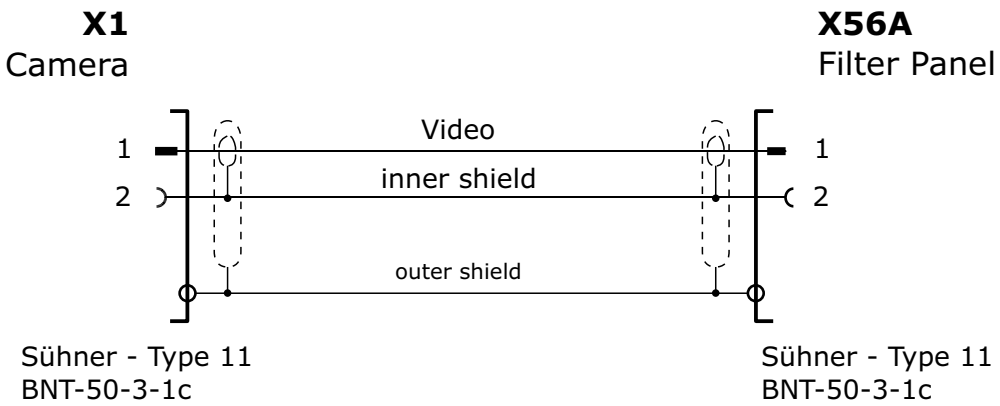

Length	Part Number	Notes
		10m Sühner Triax cable G03333

For internal use only. Copyright Siemens, 2010

<W150>

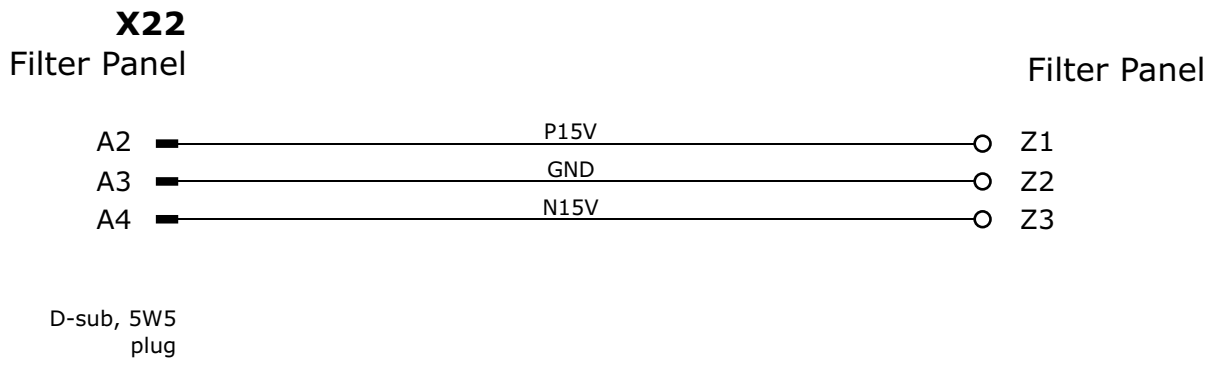

Length	Part Number	Notes
0,1m	47 55 455 K2204	

For internal use only. Copyright Siemens, 2010

<W151>

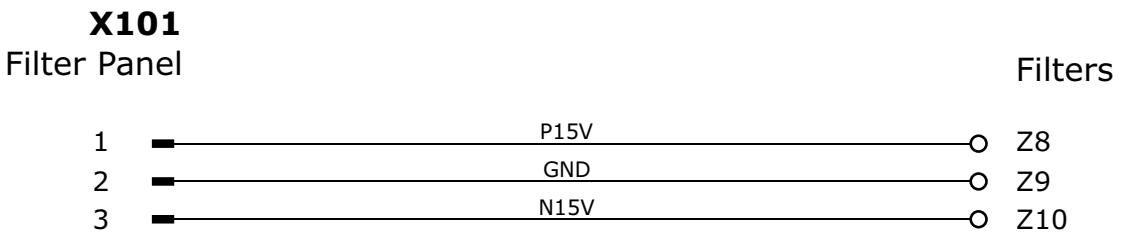

Length	Part Number	Notes
0,1m	47 55 604 K2204	

For internal use only. Copyright Siemens, 2010

<W152>

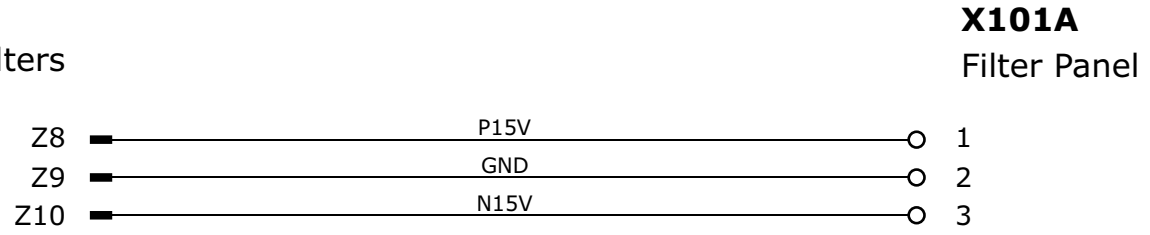

Length	Part Number	Notes
0,1m	47 55 612 K2204	

For internal use only. Copyright Siemens, 2010

<W160>

Z4, Z5
Filter Panel

X100
Patient Table Control

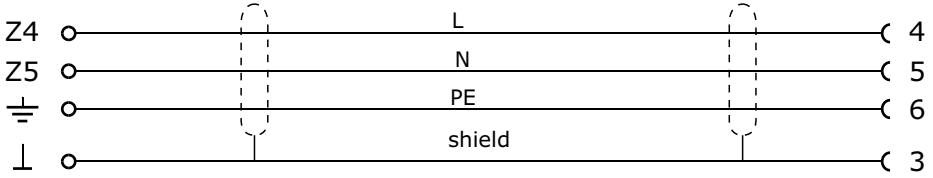

Metrimate, 9 pin

Length	Part Number	Notes
7m	47 60 547 K2200	
12m	47 66 197 K2200	
15m	57 51 842 K2201	

For internal use only. Copyright Siemens, 2010

<W182>

GND
RF Cabin

GND
Magnet

Terminal, M8

Terminal, M12

Length	Part Number	Notes
7m	47 60 596 K2200	
12m	47 66 205 K2200	
15m		

For internal use only. Copyright Siemens, 2010

<W183>

GND
RF Cabin

GND
Filter Panel

Terminal, M10

Terminal, M6

Length	Part Number	Notes
0.5m	47 60 604 K2200	

For internal use only. Copyright Siemens, 2010

<W200>

618-430

710-920 WIRING DETAIL

PIN NO.	COLOUR
1	BK
2	RD
3	WH
4	GN
5	OR
6	BU
7	BN
8	YL
9	VI
10	GY

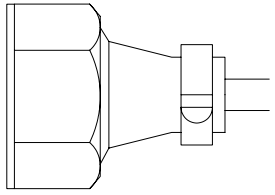

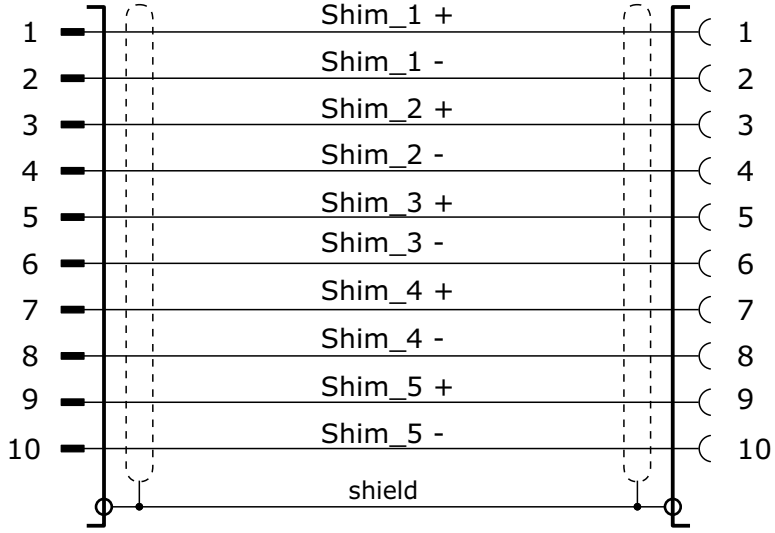

Thomas&Betts,
Triad 20 circular, 14 pin

Thomas&Betts,
Triad 20 circular, 14 pin

Length	Part Number	Notes
2m	101 04 382 K2200	
13m	72 78 323 K2200	
15m		

For internal use only. Copyright Siemens, 2010

<W201>

618-431

X12_A
Filter Panel

X1
Gradient Coil

Shim Filter

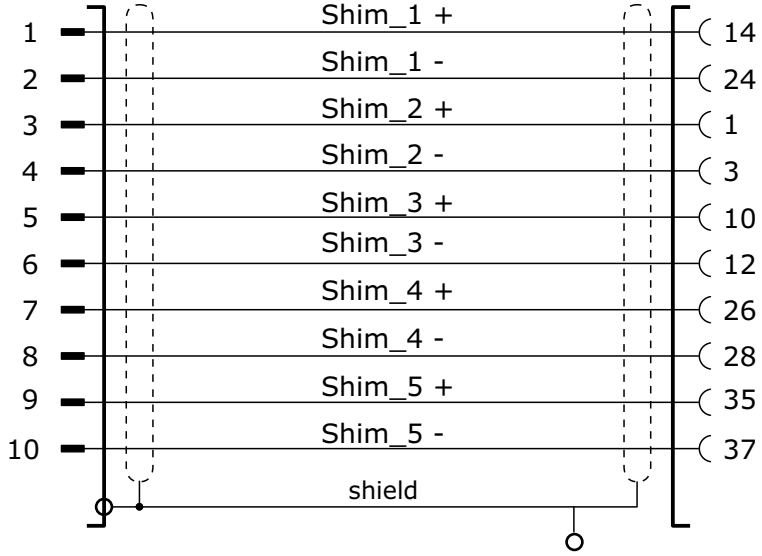

Thomas&Betts,
Triad 20 circular, 14 pin plug

AMP 206150-1, receptacle

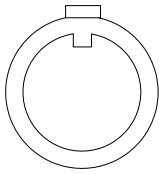

710-647 WIRING DETAIL

PIN	COLOUR
14	BLACK
1	RED
10	WHITE
26	GREEN
24	ORANGE
3	BLUE
12	BROWN
28	YELLOW
35	VIOLET
37	GREY

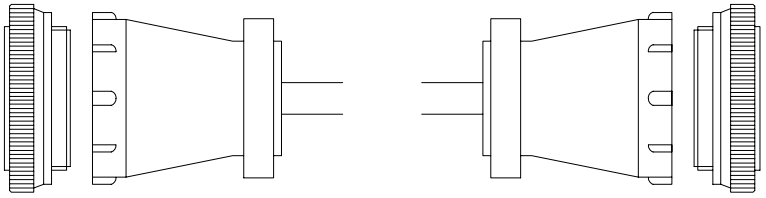

711-197 WIRING DETAIL

PIN	COLOUR
1	BLACK
2	RED
3	WHITE
4	GREEN
5	ORANGE
6	BLUE
7	BROWN
8	YELLOW
9	VIOLET
10	GREY

Length	Part Number	Notes
10m	86 68 654 K2261	

For internal use only. Copyright Siemens, 2010

<W204>

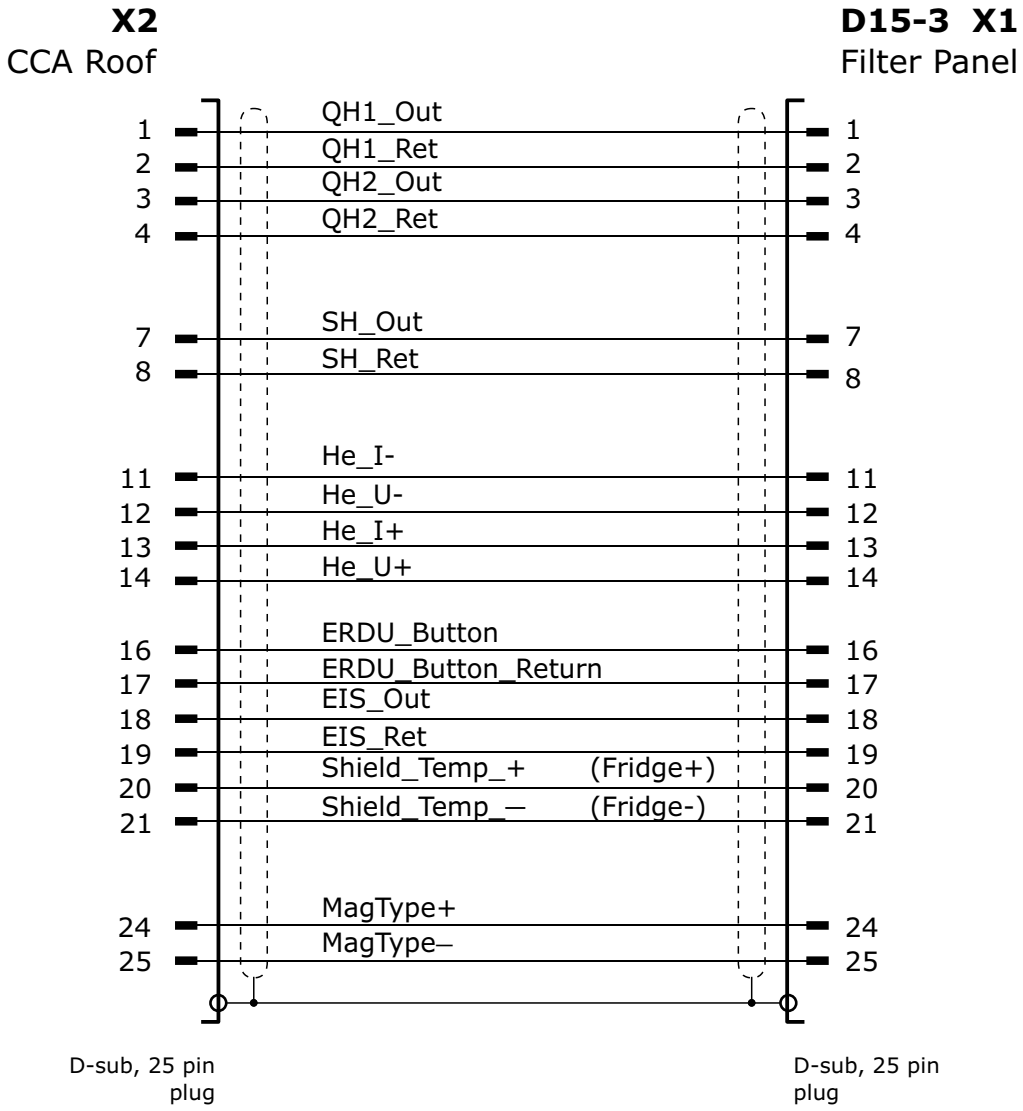

Length	Part Number
2m	101 17 063 K2200
13m	101 04 387 K2200
15m	

For internal use only. Copyright Siemens, 2010

SIEMENS AG Healthcare Sector	Cable W205			
	Project 024/047	Print No. M1-010.844.01.06	Date 06.2011	Page 101

<W205>

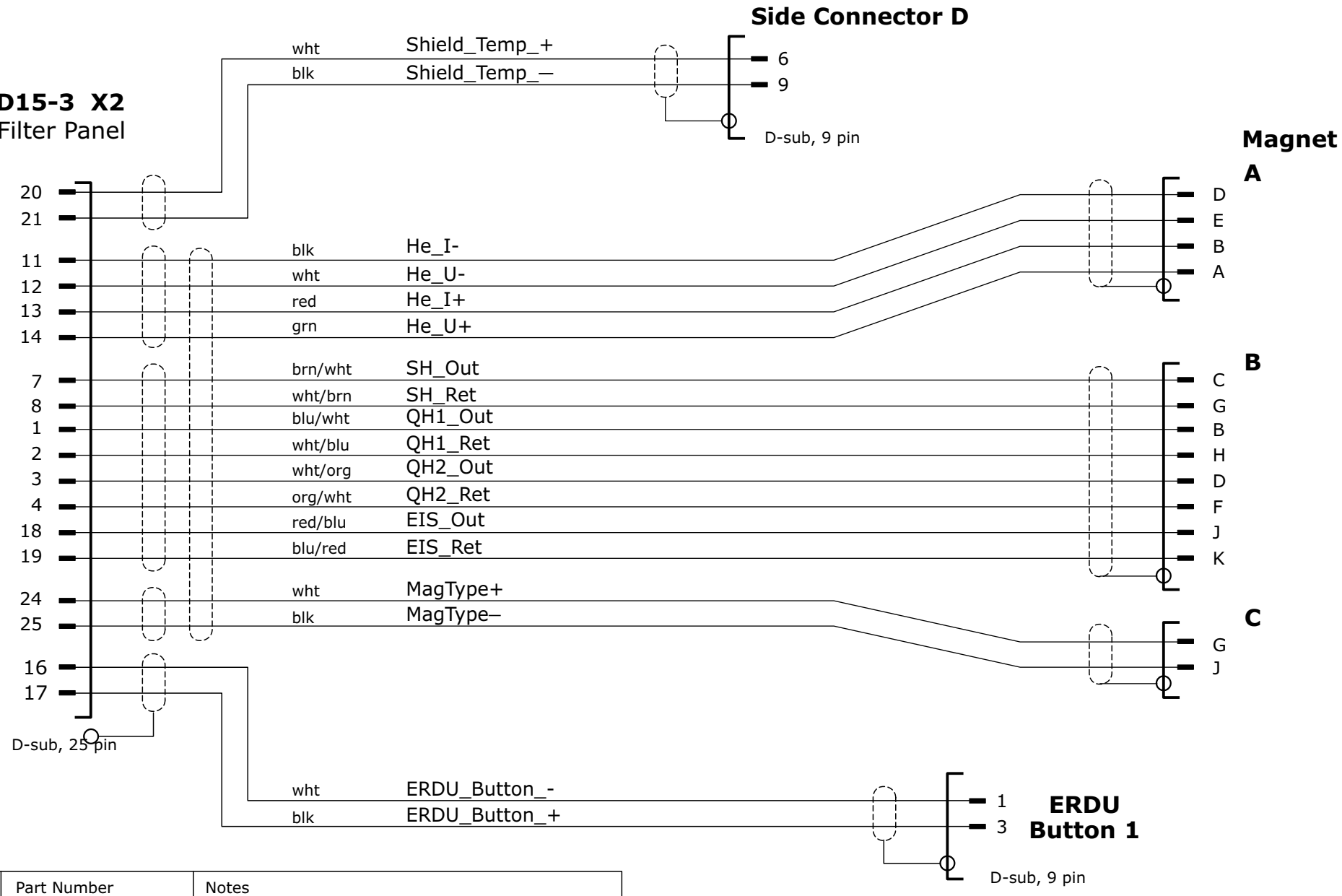

Length	Part Number	Notes
10m	57 62 492 K2200	

For internal use only. Copyright Siemens, 2010

<W206>

618-448

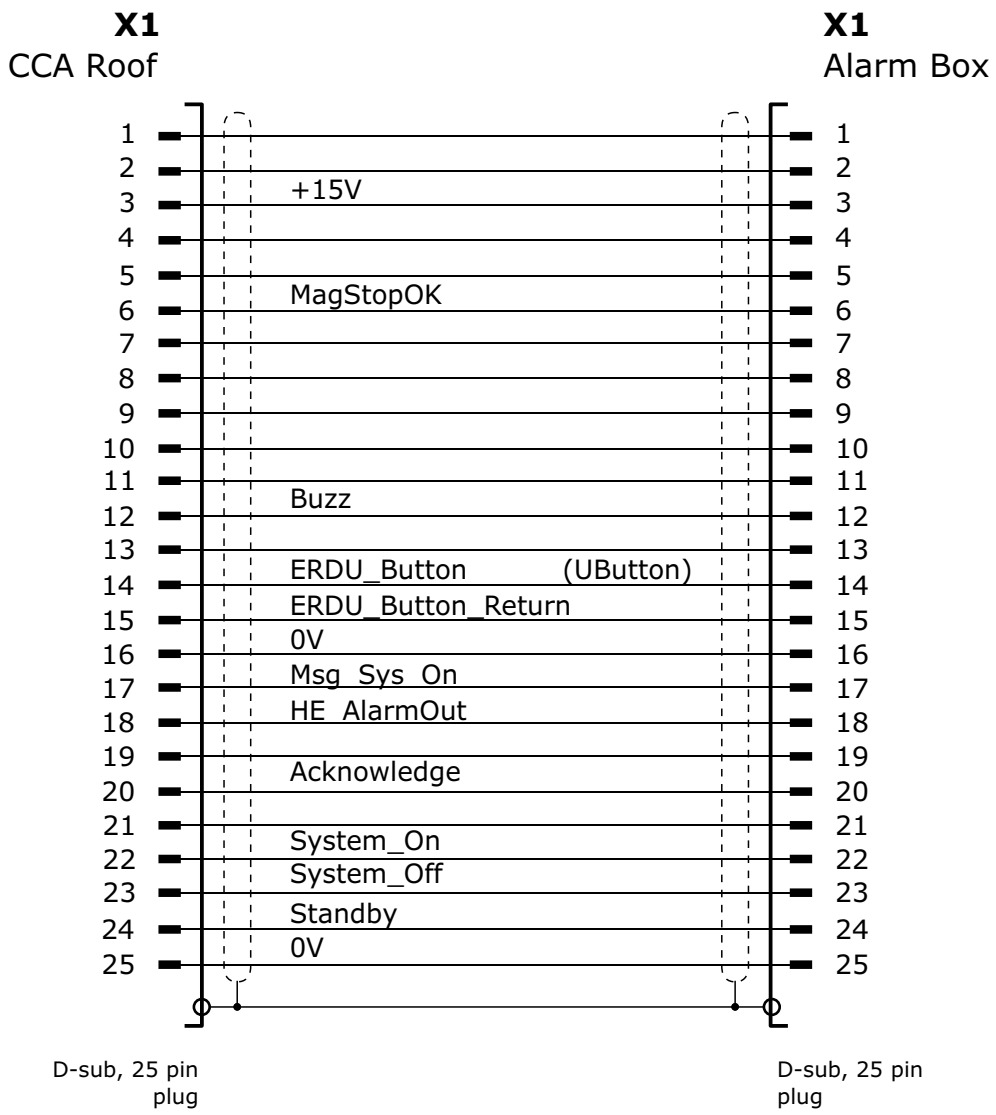

Length	Part Number	Notes
20m	70 91 916 K2200	

For internal use only. Copyright Siemens, 2010

<W210>

618-975

X102
RCA Roof

X101
Filter Panel

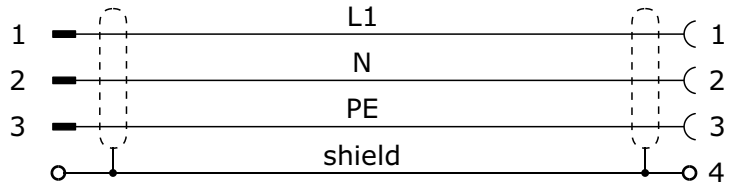

HAN 3A

HAN 3A

Length	Part Number	Notes
10m	101 04 295 K2200	

For internal use only. Copyright Siemens, 2010

<W211>

X101A
Filter Panel

X100
Cold Head

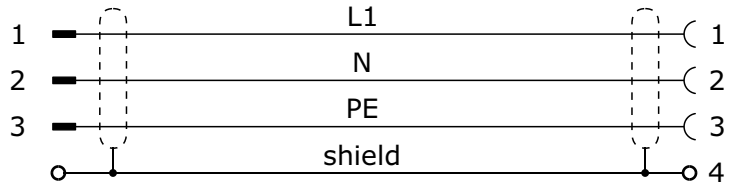

HAN 3A

HAN 3A

Length	Part Number	Notes
15m	101 04 566 K2257	old SMT pn: 618-975

For internal use only. Copyright Siemens, 2010

<W552>

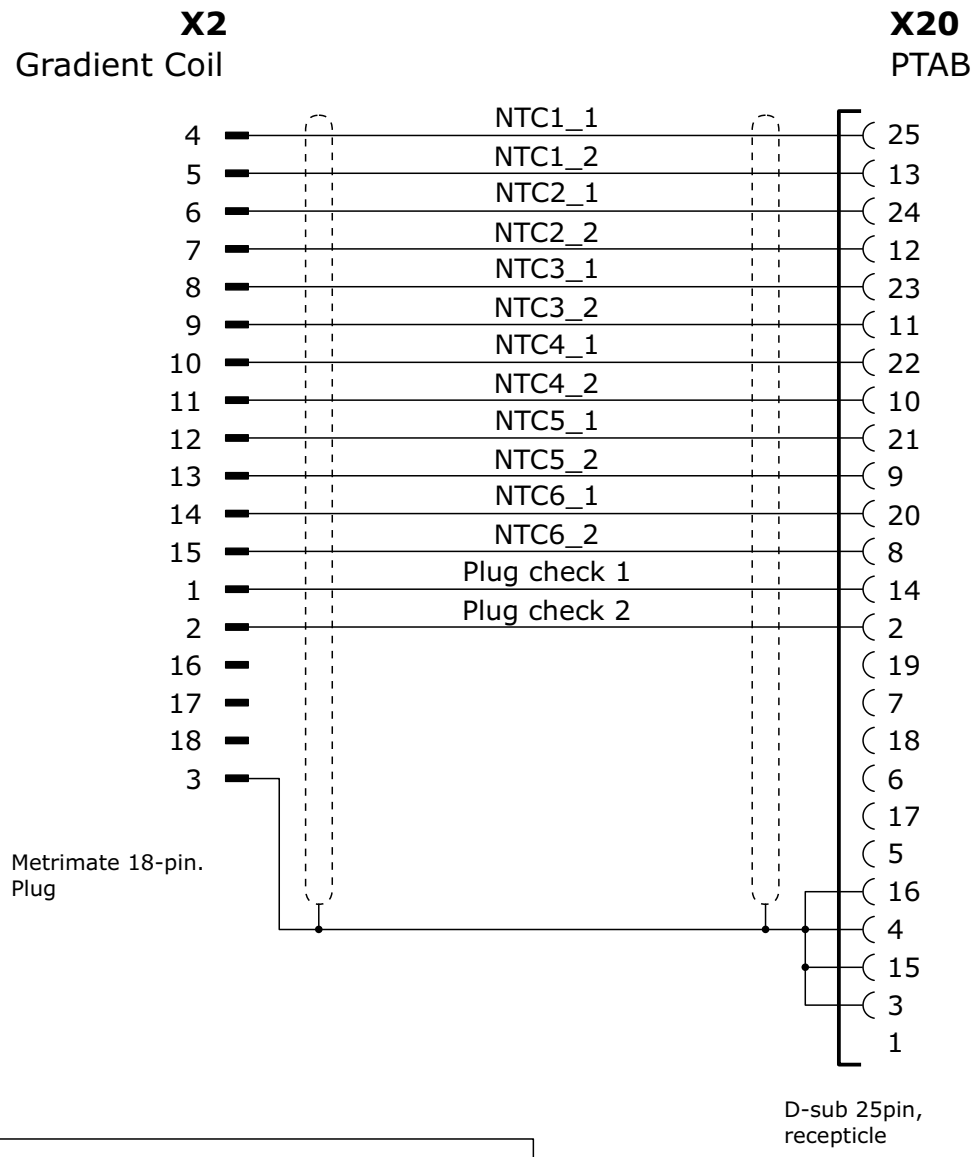

Length	Part Number	Notes
	81 10 053 K2257	

For internal use only. Copyright Siemens, 2010

W001-	1	11 40 842	K2200	SIG	Grad_X,Y,Z
W003	10	11 41 436	K2200		
	13	11 40 859	K2200	1	59 39 520
K2217		for Sonata only			
	10	59 39 314	K2217		for Sonata only
	13	57 27 420	K2217		for Sonata only
W008	3	75 46 125	K2201	SIG	Intercom to Host (Mic)
W009	3	75 46 133	K2201	SIG	Host to Intercom (CV_In)
W010	1.5	47 59 689	K2201	COAX	MRSIG 1
	10	47 66 023	K2201		
	13	47 59 796	K2201		
W011	1.5	47 59 697	K2201	COAX	MRSIG 2
	10	47 66 031	K2201		
	13	47 59 804	K2201		
W012	1.5	47 60 893	K2203	COAX	MRSIG 3
	10	47 66 262	K2203		
	13	47 59 877	K2203		
W013	1.5	47 62 147	K2203	COAX	MRSIG 4
	10	47 66 270	K2203		
	13	47 60 885	K2203		
W014	1.5	57 52 832	K2201	COAX	MRSIG 5
	10	57 52 873	K2201		
	13	57 52 295	K2201		
W015	1.5	57 52 840	K2201	COAX	MRSIG 6
	10	57 52 881	K2201		
	13	57 52 303	K2201		
W016	1.5	57 52 857	K2201	COAX	MRSIG 7
	10	57 52 899	K2201		
	13	57 52 311	K2201		
W017	1.5	57 52 865	K2201	COAX	MRSIG 8
	10	57 52 907	K2201		
	13	57 52 329	K2201		
W018	1.5	47 59 705	K2201	COAX	TTX
	10	47 66 049	K2201		
	13	47 60 687	K2201		
W019	1.5	47 59 713	K2201	COAX	SSB1_3
	10	47 66 056	K2201		
	13	47 59 695	K2201		
W020	1.5	71 21 689	K2201	COAX	SSB2_3
	5.0	75 44 630	K2201		
	10	75 44 484	K2201		
	13	75 44 450	K2201		
W021	12	47 60 711	K2201	COAX	CV
	15	47 66 221	K2201		
	22	47 60 745	K2201		
W023a	5	57 53 384	K2200	SIG	LAN Host to switch
W026a	15	57 53 350	K2200	SIG	Host to Alarm Box
W027a	15	57 53 343	K2200	SIG	D-Sub-BNC video cable
W029a	4	57 53 327	K2200	SIG	Host to Mouse
W030	12	47 60 711	K2201	FOC	PTAb, RF control
	15	47 66 221	K2201		
	22	47 60 745	K2201		
W031	12	47 60 729	K2201	FOC	Grad Coil Temp Error
	15	47 66 239	K2201		
	22	47 60 752	K2201		
W032	15	47 60 737	K2201	FOC	CAN - MSUP to RCA
W033a	25	57 53 319	K2201	FOC	Rawdata RX4 to MRIR
W033b	25	71 22 794	K2201	FOC	Rawdata RX4 to MRIR
W039a	2	57 53 459	K2200	SIG	BNC-BNC video cable
W040	1.5	47 60 760	K2201	SIG	LC plug 1-2
	10	47 66 122	K2201		
	13	47 60 810	K2201		
W041	1.5	47 60 778	K2201	SIG	LC plug 3-4
	10	47 66 130	K2201		
	13	47 62 063	K2201		
W042	1.5	47 60 786	K2201	PWR	P_N_15V
	10	47 66 148	K2201	PWR	
	13	47 59 820	K2201	PWR	
W044a	23	57 53 301	K2200	SIG	LAN - Host to switch (MRC)
W045	23	54 70 505	K2075	SIG	rawdata cable to SMI-5
W046	23	54 70 513	K2075	SIG	
W047	23	47 55 133	K2203	SIG	Physio beeper to intercom
W048a	4	57 53 293	K2200	SIG	Host to Keyboard
W051a	23	57 53 285	K2200	SIG	LAN Switch (MRC) to MRIR
W051b	23	71 22 786	K2200	SIG	LAN Switch (MRC) to MRIR
W057	20	47 62 030	K2201	SIG	door contact
W058	25	47 62 048	K2201	SIG	Intercom to filter panel
W061	9	57 50 273	K2200	PWR	UPS
W062	15	47 59 564	K2200	PWR	to RCA Controller
W063	15	47 59 572	K2200	PWR	3phase to RCA
W064	23	47 62 881	K2203	PWR	line to printer
W065	23	47 64 077	K2201	PWR	line to Digicam
W066a	23	57 53 277	K2200	PWR	to line strip
W068	2.1	47 59 598	K2200	PWR	pwr to filter panel
	13	47 59 606	K2200	SIG	RS232 to SMI-5
W069	23	57 53 269	K2200	PWR	to MRIR
W072a	1.5	71 21 002	K2200	PWR	Pwr_Dist to Intercom
W076a	3	57 53 244	K2200	PWR	Pwr_Dist to Host
W077a	2	57 53 426	K2200	PWR	to GPA
W080				GND	???
W081	15	47 60 554	K2200	GND	CCA-RCA
W083	23	47 60 562	K2200	GND	CCA-MRC
W084	23	47 55 315	K2200	GND	CCA-MRSC
W085	1,5	47 60 570	K2200	GND	CCA-Filter Panel
	13	47 60 588	K2200		
W086a	1,8	57 53 376	K2200	PWR	pwr to switch
W087	90	57 74 281	K2200	SIG	looooong LAN cable to switch
W088a	5	57 74 299	K2200	SIG	short LAN cable to switch
W089a	23	57 74 364	K2200	GND	CCA-MRIR
W090a	23	57 74 372	K2200	GND	CCA-line distributor for Host
W091a	3	57 74 570	K2200	PWR	MRSC to monitor
W092a	15	57 74 653	K2200	SIG	LAN
W101-	5	11 40 867	K2200	SIG	Grad_X,Y,Z
W103	8	11 41 444	K2200		
	5	57 27 438	K2217		for Sonata
	8	59 39 306	K2217		for Sonata

W110	7	47 59 739	K2201	COAX	MRSIG_1
	10	47 66 072	K2201		
W111	7	47 59 747	K2201	COAX	MRSIG_2
	10	47 66 080	K2201		
W112	7	47 62 139	K2201	COAX	MRSIG_3
	10	47 66 288	K2201		
W113	7	47 59 895	K2201	COAX	MRSIG_4
	10	47 66 296	K2201		
W118	7	47 59 754	K2201	COAX	TTX
	10	47 66 098	K2201		
W119	7	47 59 762	K2201	COAX	SSB
	10	47 66 106	K2201		
W120	7	47 62 410	K2200	COAX	TX_LC
	10	47 66 213	K2200		
W121	7	47 59 770	K2201	COAX	CV
	10	47 66 114	K2201		
W123	7	47 59 788	K2201	COAX	Dummy
	10	47 66 247	K2201		
W124	0.5	71 21 697	K2201	COAX	SSB2
W125	7	75 44 476	K2201	COAX	TX_LC
	10	71 22 349	K2201		
	15	75 45 648	K2201		
W140	7	47 60 802	K2201	SIG	intercom to PTab
	10	47 66 155	K2201		
W142	7	47 62 055	K2204	PWR	P_N_15 to RFAS
	10	47 66 163	K2204		
W143	7	47 61 529	K2204	SIG	TAS control
	10	47 66 189	K2204		
W145		47 55 463	K2204	PWR	
W146	7	47 59 812	K2201	SIG	Coil Control
	10	47 66 171	K2201		
W150	0.1	47 55 455	K2204	PWR	X21 to Z1-Z3
W151	0.1	47 55 604	K2204	PWR	X101 to Z8-Z10
W152	0.1	47 55 612	K2204	PWR	Z8-Z10 to X101A
W160	7	47 60 547	K2200	PWR	AC to PTab
	12	47 66 197	K2200		
W182	7	47 60 596	K2200	GND	Filter Panel to Magnet
W183	0.5	47 60 604	K2200	GND	Filter Panel to Cabin
W200	2	101 04 382	K2200	SIG	SHim
	13	72 78 323	K2200		
W201	10	86 68 654	K2261	SIG	Shim
W204	2	101 17 063	K2200	SIG	Magnet monitoring
	13	101 04 387	K2200		
W205	10	57 62 492	K2200	SIG	Magnet monitoring
W206	20	70 91 916	K2200	SIG	CCA to Alarm Box
W210	10	101 04 295	K2200	PWR	Line to RCA Controller
W211	15	101 04 566	K2257	PWR	Cold Head
W541	0.2			FOC	CAN
W542	0.2				
W552	2	81 10 053	K2257	SIG	NTC temp sensor to Ptab

For internal use only. Copyright Siemens, 2010

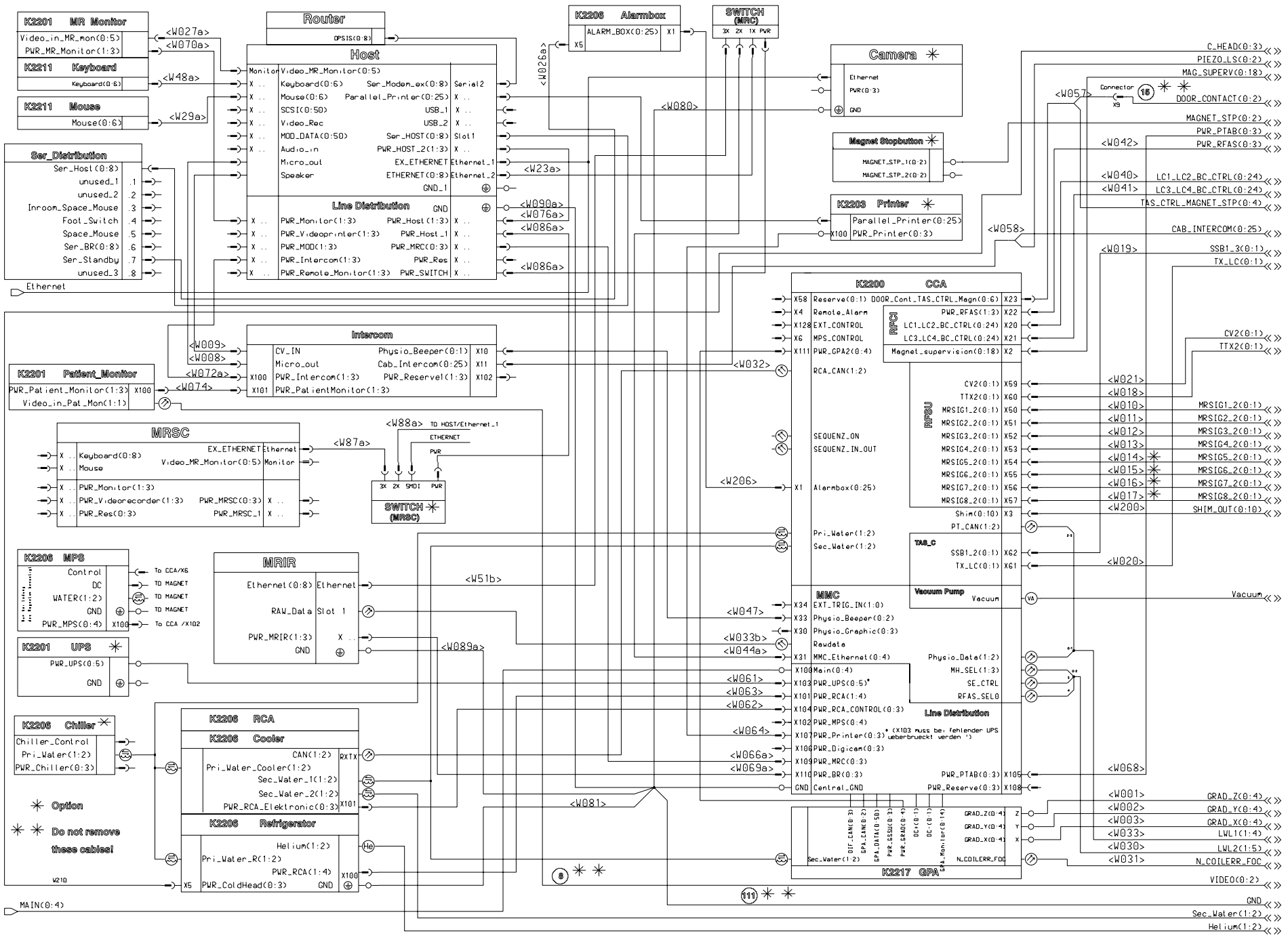

For internal use only. Copyright Siemens, 2010

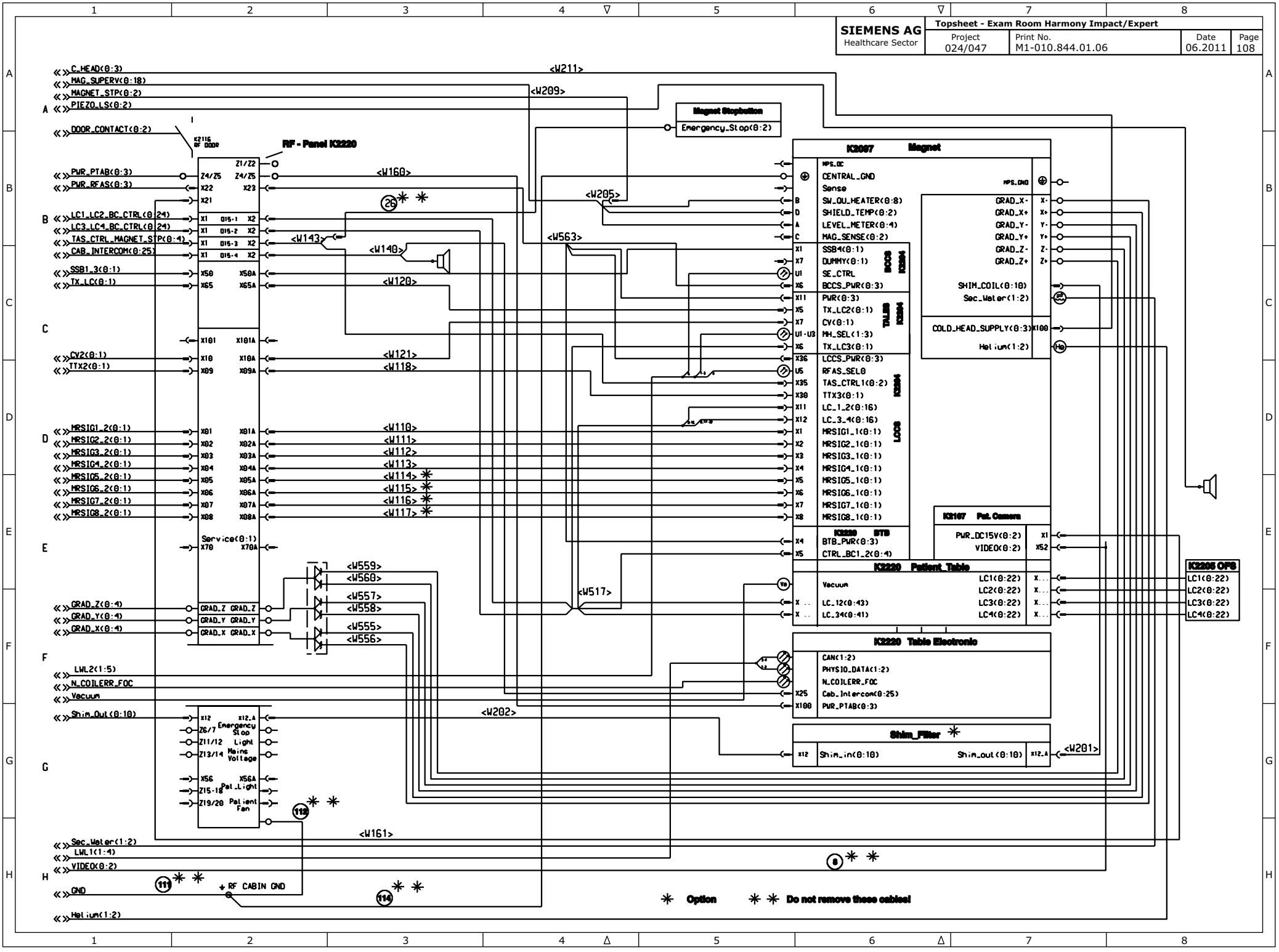

For internal use only. Copyright Siemens, 2010

Changes to previous version:

All drawings converted to vector and text to allow search queries.

Links have been added for better navigation.

Block diagrams for Cooling system added

Block diagrams for RFAS added

For internal use only. Copyright Siemens, 2010